ABBREVIATIONS & SYMBOLS

A.B.	–ANCHOR BOLT(S)
@	–AT
ABC	–AGGREGATE BASE COURSE
A/C	– AIR CONDITIONING
ACI	–AMERICAN CONCRETE INSTITUTE
ADDN'L.	–ADDITIONAL
ADJ.	–ADJUSTABLE
AFF.	–ABOVE FINISH FLOOR
AISC	–AMERICAN INSTITUTE OF STEEL CONSTRUCTION
A.M.S.L.	–ABOVE MEAN SEA LEVEL
ANCH.	–ANCHOR
APPROX.	–APPROXIMATE
ARCH'T	–ARCHITECT OR ARCHITECTURAL DOCUMENTS
ASTM	–AMERICAN SOCIETY FOR TESTING AND MATERIALS
AWG	–AMERICAN WIRE GAUGE
AWS	–AMERICAN WELDING SOCIETY
AVG.	–AVERAGE
BLDG.	–BUILDING
BLK.	–BLOCK
BM.	–BEAM
BOT. OR B.	–BOTTOM
BRG.	–BEARING
BRK	–BRICK
BTWN.	–BETWEEN
BW	–BUTT WELD
CALCS	CALCULATIONS
CANT.	–CANTILEVER
C-C	–CENTER TO CENTER
CEIL. OR CLG.	–CEILING
C.I.P.	–CAST IN PLACE
C.J.	–CONTROL JOINT OR CONSTRUCTION JOINT
C.L.	–CHAIN LINK FENCE
CL OR CLR	–CLEAR
C.M.U.	–CONCRETE MASONRY UNIT
℄	–CENTER LINE
CLOS.	–CLOSURE
CLR.	– CLEAR
COL.	– COLUMN
CONC.	–CONCRETE
CONN.	–CONNECTION
CONSTR.	CONSTRUCTION
CONT.	–CONTINUE OR CONTINUOUS
CONTR.	–CONTRACTOR
CTR. OR CNTR.	–CENTER
CTR'D.	–CENTERED
DBL.	–DOUBLE
DEPR.	–DEPRESSION
DET OR DTL	–DETAIL
DIA. OR ø	–DIAMETER
DIAG.	–DIAGONAL
DIM.	–DIMENSION
DL	–DEAD LOAD
DN.	–DOWN
DP	–DEEP OR DEPTH
DWG.	–DRAWING(S)
DWL.	–DOWEL
E	–EAST
EA.	–EACH
E.F.	–EACH FACE
E.J.	–EXPANSION JOINT
EL. OR ELECT'L.	–ELECTRICAL
EL. OR ELEV.	–ELEVATION
ENGR	–ENGINEER
EQ.	–EQUAL
EQUIP.	–EQUIPMENT
ES	–EACH SIDE
EW	–EACH WAY
E-W	–EAST – WEST
EXC	–EXCAVATE
EXIST.	–EXISTING
EXP.	–EXPANSION
EXT.	–EXTERIOR
FAB	–FABRICATE
FND	–FOUNDATION
F.F.	–FAR FACE
FIN.	–FINISH
FLG.	–FLANGE
FLR.	–FLOOR
FLUOR.	–FLUORESCENT
F.O.M.	–FACE OF MASONRY
FRMG.	–FRAMING
FS	–FAR SIDE
FT.	–FOOT–FEET
FTG.	–FOOTING
FW	–FILLET WELD
FY	–YIELD STRESS OF STEEL
GA.	–GAGE OR GAUGE
GALV.	–GALVANIZED
GC OR GEN CONTR.	–GENERAL CONTRACTOR
GLU–LAM	– GLUE LAMINATED
GR OR GRD	– GRADE
GRND	– GROUND
G.S.N.	–GENERAL STRUCTURAL NOTES
GWB	–GYPSUM WALL BOARD
GYP. BD.	–GYPSUM BOARD
H.A.S.	–HEADED ANCHOR STUD
HARD'WD	–HARDWOOD
HORIZ.–HOR.	–HORIZONTAL
HR	–HOUR
H.S.	–HIGH STRENGTH
HT.	–HEIGHT
HVAC	–HEATING, VENTING AND AIR CONDITIONING
I (in^4)	–MOMENT OF INERTIA
ICBO	–INTERNATIONAL CONFERENCE OF BUILDING OFFICIALS
I.D.	–INSIDE DIAMETER
I.F.	–INSIDE FACE
IN	–INCH
INCL	–INCLUDE
INFO	–INFORMATION
INSUL.	–INSULATION
INT	–INTERIOR
JT.	–JOINT
K	–KIP = 1000 LBS.
LB OR #	–POUND(S)
LG.	–LONG
LL	–LIVE LOAD
L.L.H.	–LONG LEG HORIZONTAL
L.L.V.	–LONG LEG VERTICAL
LOC.	–LOCATION
LT.–LGT.	–LIGHT
LWC	–LIGHT WEIGHT CONCRETE
MACH	–MACHINE
MAS	–MASONRY
MATL	–MATERIAL
MAX.	–MAXIMUM
M.B.	–MACHINE BOLT
MECH.	–MECHANICAL
MEMB.	–MEMBRANE
MEZZ.	–MEZZANINE
MFR.	–MANUFACTURER
MGR	–MANAGER
MID.	–MIDDLE
MIN.	–MINIMUM
MISC	–MISCELLANEOUS
MO	–MASONRY OPENING
MOE (psi)	–MODULES OF ELASTICITY
MPE	–MECHANICAL, PLUMBING, ELECTRICAL
MTL.	–METAL
N OR NO	–NORTH
NA	–NOT APPLICABLE
NAAMM	–NATIONAL ASSOCIATION OF ARCHITECTURAL METAL MANUFACTURERS
NF	–NEAR FACE
NIC	–NOT IN CONTRACT
No. OR #	–NUMBER
NS	–NEAR SIDE
N–S	–NORTH – SOUTH
N.T.S.	–NOT TO SCALE
O.C. OR O/C	–ON CENTER
O.D.	– OUTSIDE DIAMETER
O.F.	– OUTSIDE FACE
O.H.	–OVERHANG
OPNG.	– OPENING
OPP	–OPPOSITE
OPP HD	–OPPOSITE HAND
PCI	–PRESTRESSED CONCRETE INSTITUTE
P.C. OR P/C	–PRECAST
PCF	–POUNDS PER CUBIC FOOT
PEN	–PENETRATION
ℙ	–PLATE
PERP.	–PERPENDICULAR
P.L.	–PROPERTY LINE
PLF	–POUNDS PER LINEAL FOOT
PLYWD	–PLYWOOD
PP	–PART. POINT OR PARTIAL PENETRATION
PR	–PAIR
PRELIM	–PRELIMINARY
PROJ	PROJECT
PROP	–PROPERTY
PSI	–POUNDS PER SQUARE INCH
PT	–PRESSURE TREATED
R, OR RAD.	–RADIUS
R	–RISER (STAIR)
REINF.	–REINFORCED OR REINFORCING
REQ'D.	–REQUIRED
RM	–ROOM
R.O.	– ROUGH OPENING
S OR SO	–SOUTH
S (in^3)	–SECTION MODULES
SCHED.	SCHEDULE
SECT	–SECTION
SGC	–SAND, GRAVEL, COBBLES SOIL LAYER
SHTHG	–SHEATHING
SH OR SHT	–SHEET
SIM.	–SIMILAR
SLV	–SLEEVE OR SHORT LEG VERTICAL
SLH	–SHORT LEG HORIZONTAL
SJI	–STEEL JOIST INSTITUTE
SOG	–SLAB ON GRADE
SP OR SPCS	–SPACES
SPCG	–SPACING
SPEC.	–SPECIFICATION
SQ.	–SQUARE
SS	STAINLESS STEEL
STD.	–STANDARD
STIFF.	–STIFFENER
STL.	–STEEL
STRUCT.	–STRUCTURE OR STRUCTURAL
SUSP.	–SUSPENDED
S.V.	–SHEET VINYL
SYMM.	–SYMMETRICAL
T.	–TOP OR TREAD (STAIR)
T & B	–TOP AND BOTTOM
T & G	–TONGUE AND GROOVE
THK	–THICK OR THICKNESS
THK'ND	–THICKENED
THRU	–THROUGH
TL	–TOTAL LOAD
TNND	–TINNED
TOC	–TOP OF CONCRETE
T.O.M.	–TOP OF MASONRY
TOPG	–TOPPING
TOS	–TOP OF STEEL
TR	–TRUSS
TYP.	– TYPICAL
UBC	–UNIFORM BUILDING CODE
U.N.O.	–UNLESS NOTED OTHERWISE
VERT.	–VERTICAL
VIF	VERIFY IN FIELD
VT	–VINYL TILE
W	–WEST
W/	–WITH
WIN	–WINDOW
W/O	–WITHOUT
WD	–WOOD
W.P.	–WORKING POINT
WT.–HGT.	–WEIGHT
W.W.F. OR W.W.M	–WELDED WIRE FABRIC
X–BRACE	–CROSS BRACING
X–STRONG	–EXTRA STRONG
XX–STRONG	–DOUBLE EXTRA STRONG

SYMBOLS

- REVISION
- KEY NOTES
- DETAIL REFERENCE (1 / C-1)
- ROOM NUMBER (100)
- KEYED NOTES (1)
- ELEVATION REFERENCE (1 / C-1)
- SECTION REFERENCE
- TRUE NORTH ARROW (N 0°, W 270°, E 90°, S 180°)

CENCOM 9-1-1

Police - Fire - Medical

CENCOM - PURDY SITE

VICINITY MAP

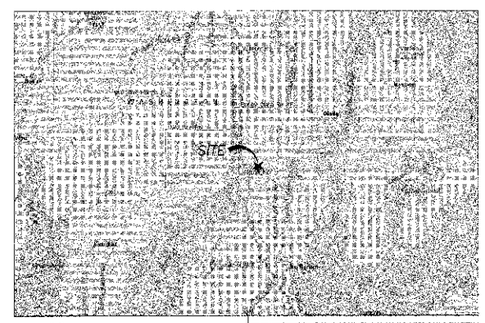

LOCATION MAP

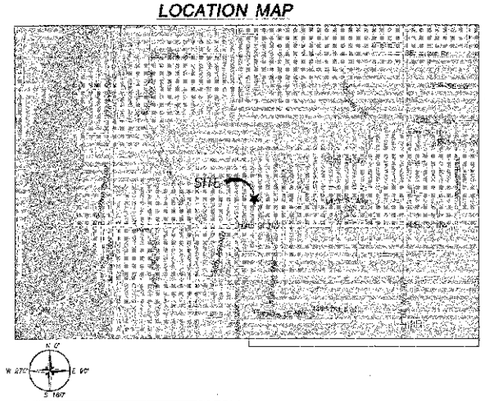

PROJECT SUMMARY

SITE NAME:
CENCO – PURDY SITE

SITE ADDRESS:
14515 54TH AVE. NW
PURDY, WA 98332

PROPERTY OWNER:
PIERCE COUNTY
CONTACT: TIM LENK
PHONE: (253) 798-7147

APPLICANT
CENCOM
911 CARVER STREET
BREMERTON, WA 98312
CONTACT: DEAN HEGTAND
VOICE: (360) 307-5860

JURISDICTION:
PIERCE COUNTY

ZONING DESIGNATION:
RSVP

COMMUNICATIONS ENGINEER:
ADCOMM ENGINEERING, INC
3929-184TH PLACE SE,
BOTHELL, WA 98012-8827
CONTACT: MARY JESSE
DIRECT VOICE: 425-940-5351

OWNER:
PENINSULA LIGHT CO.
CONTACT: KAREN DUKE
VOICE: (253) 857-1546

TELEPHONE:
CENTURY TEL
CONTACT: JAMIE McCORD
VOICE: (203) 815-1259

CONSULTING TEAM

ARCHITECTURAL & ENGINEERING SERVICES:
COMMUNICATION SERVICES, INC.
2151 EAST BROADWAY ROAD, STE 217
TEMPE, ARIZONA 85282
VOICE: 541-450-0394
FAX: 480-905-8818
CONTACT: MIKE MULLEN

ZONING:
MICHAEL AIPPERSBACH & ASSOCIATES
P.O. BOX 95429
SEATTLE, WA 98145-2429
VOICE: (206) 523-3764
CONTACT: MICHAEL AIPPERSBACH

CALL BEFORE YOU DIG!
WASHINGTON LAW REQUIRES
72 HOURS NOTICE FOR
CONSTRUCTION PHASE
STOP!
CALL THE UNDERGROUND LOCATION CENTER
1-800-424-5555

GEODETIC COORDINATES

LATITUDE: 47° 23' 27" NORTH (NAD 83)
LONGITUDE: 122° 36' 29" WEST (NAD 83)

DRIVING DIRECTIONS FROM SEA-TAC INTERNATIONAL AIRPORT

FROM SEA-TAC INTERNATIONAL AIRPORT: TURN LEFT ON INTERNATIONAL BLVD. TURN LEFT ON S. 200 ST. MERGE ONTO I-5 SOUTH. TAKE EXIT 132 ONTO WA-16 W TOWARD GIG HARBOR/BREMERTON. TAKE THE WA-309 EXIT TOWARD PURDY/KEY CENTER. MERGE ONTO PURDY DR. NW/WA-302. TURN RIGHT ON 144TH ST. NW. SITE ON LEFT SIDE.

SHEET INDEX

SHEET NUMBER	DESCRIPTION
T-1	TITLE SHEET, VICINITY MAP AND GENERAL INFORMATION
LS-1	SITE SURVEY (FOR REFERENCE ONLY)
ARCHITECTURAL:	
C-1	SITE PLAN
C-2	ENLARGED SITE PLAN
C-3	WEST ELEVATION
C-4	DETAILS
C-5	DETAILS
C-6	NOTES
C-7	SPECIAL INSPECTION NOTES
C-8	EROSION CONTROL, SEEDING & MULCH NOTES
ELECTRICAL:	
E-1	ELECTRICAL PLAN & ONE-LINE DIAGRAM
E-2	GROUNDING PLAN
E-3	GROUNDING DETAILS

PROJECT DESCRIPTION

CO-LOCATION AT AN EXISTING UNMANNED WIRELESS COMMUNICATION FACILITY. PROJECT CONSISTS OF NEW RADIO EQUIPMENT IN A NEW (USED) EQUIPMENT SHELTER AND NEW MICROWAVE DISHES ON AN EXISTING 300'-0" SELF SUPPORT TOWER. ALL WITHIN AN EXISTING 75'-0" x 100'-0" FENCE COMPOUND.

REVIEW SIGNATURES

DEPARTMENT	SIGNATURE	DATE
CSI CONSTRUCTION		
CSI PM		
MOTOROLA AM		
MOTOROLA R.F.		
OWNER/LANDLORD		

ADCOMM Engineering

Specialists in Public Safety Communications

3929 184th Place SE
Bothell, WA
98012-8827

PLANS PREPARED BY:

CSI
Communication Services, Inc.
2151 EAST BROADWAY RD, STE 217
TEMPE, ARIZONA 85282
V: 541-450-0394 F: 480-905-8818

PROJECT INFORMATION

CENCOM - PURDY SITE

14515 54TH AVE. NW
PURDY, WA 98332
PIERCE COUNTY

NO.	DATE	DESCRIPTION	BY
1	05/05/09	PRELIMINARY CDs	JRS
2	06/05/09	FINAL CDs	JN
2	07/14/09	REVISIONS	DM
3	07/15/09	REVISIONS	MA

SEAL

SHEET TITLE
TITLE SHEET, VICINITY MAP AND GENERAL INFORMATION

SHEET NUMBER
T-1

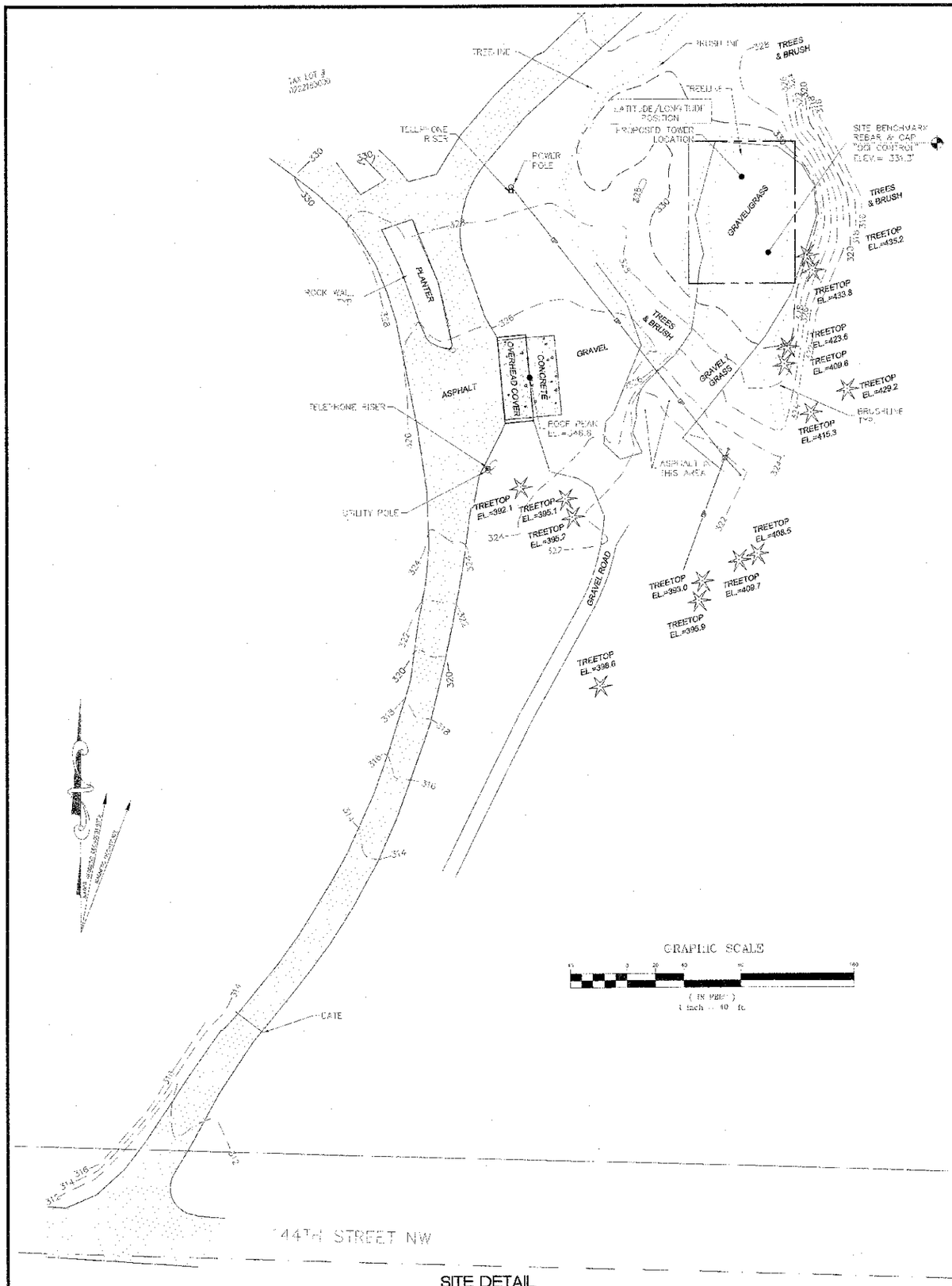

SITE DETAIL

LEGAL DESCRIPTION

SECTION 13 TOWNSHIP 22 RANGE 03 QUARTER 33 LOT 4 LESS E 13 AC LESS RD

EASEMENTS

(#) CORRESPONDS WITH ITEM NUMBER IN "SCHEDULE B" OF TITLE REPORT

THE FOLLOWING EASEMENTS FROM THE REFERENCED TITLE REPORT CONTAIN SUFFICIENT INFORMATION TO BE DEPICTED ON THE PLAN. OTHER EASEMENTS OR ENCUMBRANCES, IF ANY, MAY AFFECT THE PROPERTY, BUT LACK SUFFICIENT INFORMATION TO BE SHOWN.

(A) NO TITLE RESEARCH PROVIDED AT THIS TIME.

NOTES

1) NO TITLE RESEARCH PROVIDED AT THIS TIME. CALCULATED BOUNDARY MAY CHANGE UPON RECEIPT OF TITLE.
2) FIELD WORK CONDUCTED IN JULY, 2007.
3) BASIS OF BEARING: WASHINGTON STATE PLANE COORDINATE SYSTEM, NORTH ZONE (NAD83).
4) UNDERGROUND UTILITIES SHOWN HEREON, IF ANY, WERE DELINEATED FROM SURFACE EVIDENCE AND/OR UTILITY COMPANY RECORDS. CRITICAL LOCATIONS SHOULD BE VERIFIED PRIOR TO DESIGN AND CONSTRUCTION.
5) CONTRACTOR TO VERIFY SHELTER PAD NOT LOCATED ON TOP OF SITE BENCHMARK REBAR & CAP. COORDINATE WITH PROJECT REPRESENTATIVE.

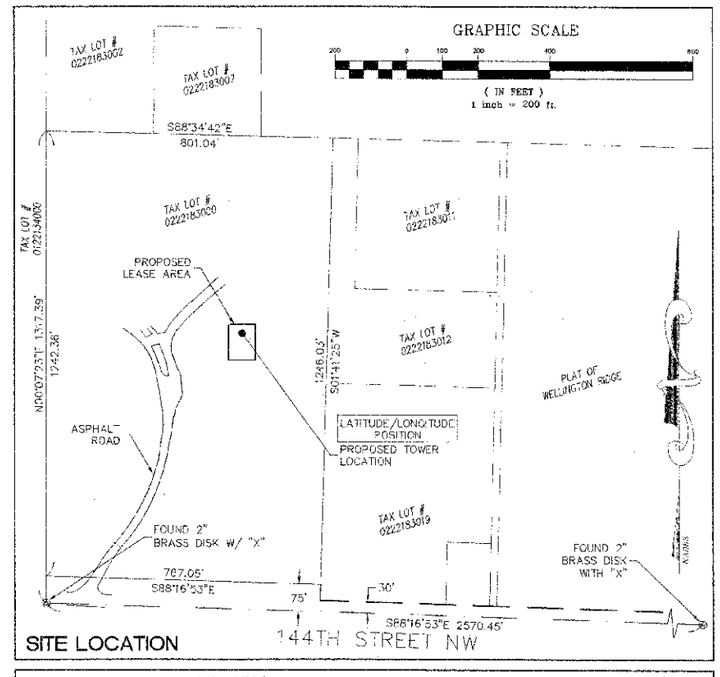

SITE LOCATION

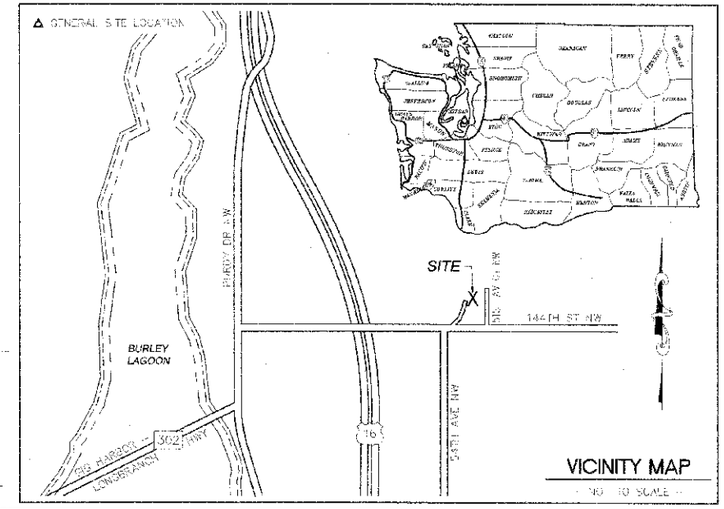

LEGEND

- SUBJECT BOUNDARY LINE
- RIGHT-OF-WAY CENTERLINE
- RIGHT-OF-WAY LINE
- ADJACENT BOUNDARY LINE
- SECTIONAL BREAKDOWN LINE
- OVERHEAD POWER LINE
- BURIED POWER LINE
- BURIED GAS LINE
- OVERHEAD TELEPHONE LINE
- BURIED TELEPHONE LINE
- BURIED WATER LINE
- BURIED SANITARY SEWER
- BURIED STORM DRAIN
- DITCH LINE/FLOW LINE
- ROCK RETAINING WALL
- VEGETATION LINE
- CHAIN LINK FENCE
- WOOD FENCE
- BARBED WIRE/WIRE FENCE
- TRANSFORMER
- LIGHT STANDARD
- POWER VAULT
- UTILITY BOX
- UTILITY POLE
- POLE GUY WIRE
- GAS VALVE
- GAS METER
- TELEPHONE VAULT
- TELEPHONE RISER
- FIRE HYDRANT
- GATE VALVE
- WATER METER
- FIRE STAND PIPE
- CATCH BASIN, TYPE I
- CATCH BASIN, TYPE II
- SIGN
- BOLLARD
- MAIL BOX
- 234.21 SPOT ELEVATION

NOTE:
1) ALL ELEVATIONS SHOWN ARE ABOVE MEAN SEA LEVEL (AMSL) AND ARE REFERENCED TO THE NAVD88 DATUM.
2) ALL TOWER, TREE AND APPURTENANCE HEIGHTS ARE ABOVE GROUND LEVEL (AGL) AND ARE ACCURATE TO ± 3 FEET OR ± 1% OF TOTAL HEIGHT, WHICHEVER IS GREATER.

TREE LEGEND

DECIDUOUS TREE — 4.12 TRUNK DIAMETER (IN) — TYPE

AL=ALDER, MP=MAPLE, DS=DECIDUOUS, MA=MADRONA, OK=OAK, CH=CHERRY

EVERGREEN TREE — DF15 195.2 — HEIGHT AGL IF MEASURED

CE=CEDAR, DF=DOUGLAS FIR, HE=HEMLOCK, PI=PINE, EVG=EVERGREEN

NOTE:
TREE DRIP LINES ARE NOT TO SCALE. TREE SYMBOLS REFERENCE TRUNK LOCATION ONLY. TRUNK DIAMETERS WERE APPROXIMATED AT 3.5' TO 4' ABOVE GROUND LEVEL UNLESS SHOWN ARE FOR REFERENCE ONLY AND OTHER TREES AND VEGETATION MAY EXIST.

SITE INFORMATION

TAX "A" NUMBER	0222183000
SITE ADDRESS	14515 54TH AV NW PURDY, WA 98332
SITE CONTACT	
PHONE NUMBER	
ZONING	
TOTAL LOT AREA	975,348± S.F.(22.4± AC.)
PROJECT AREA	7600 S.F.

LATITUDE/LONGITUDE POSITION

COORDINATE DATA AT PROPOSED TOWER LOCATION:

NAD 83	NAVD 88
LAT = 47°22'28.04" N	ELEV = 331.5 FEET (GROUND)
LONG = 122°36'28.42" W	

BENCHMARK IS PIERCE COUNTY PUBLIC WORKS CONTROL POINT "BASE" ELEV = 309.92'

ELEVATION DERIVED USING GPS. ACCURACY MEETS OR EXCEEDS 2C STANDARDS AS DEFINED ON THE FAA ASAC INFORMATION SHEET # 303.

SURVEY REFERENCE

SURVEY NO. 8702210219, RECORDS OF PIERCE COUNTY, WASHINGTON.

BOUNDARY DISCLAIMER

THIS PLAN DOES NOT REPRESENT A BOUNDARY SURVEY. SUBJECT AND ADJACENT PROPERTY LINES ARE DEPICTED USING FIELD-FOUND EVIDENCE AND RECORD INFORMATION.

CAUTION!

UNDERGROUND UTILITIES EXIST IN THE AREA AND UTILITY INFORMATION SHOWN MAY BE INCOMPLETE. STATE LAW REQUIRES THAT CONTRACTOR CONTACT THE ONE-CALL UTILITY LOCATE SERVICE AT LEAST 48 HOURS BEFORE STARTING ANY CONSTRUCTION.

1-800-424-5555

DUNCANSON Company, Inc.
145 SW 155th Street, Suite 102
Seattle, Washington 98166
Phone 206.244.4141
Fax 206.244.4455

Communication Services, Inc.
3702 West Valley Highway North, Suite 300
Auburn, WA 98001
Telephone (253) 735-4525 Fax (253) 735-4554

THIS DRAWING WAS CREATED FOR THE EXCLUSIVE USE OF THE CLIENT NAMED HEREON AND IS NOT TO BE USED IN WHOLE OR IN PART WITHOUT WRITTEN AUTHORIZATION FROM DUNCANSON COMPANY, INC.

REVISIONS

NO.	DATE	DESCRIPTION	BY	CK
1	08/30/07	ADD TOPO, REMOVE TOPOGRAPHY	KJ	
2				
3	07/15/09	REVISIONS		NA

PURDY TRANSFER STATION

EXISTING SITE SURVEY
SEC 13, TWP 22 N, RNG 1 E, WM

FLD. CREW:	JE/KB
FLD. BOOK:	BK/PG
DRAWN BY:	MAO
JOB #:	06654.006
DATE:	07/16/07

LS1

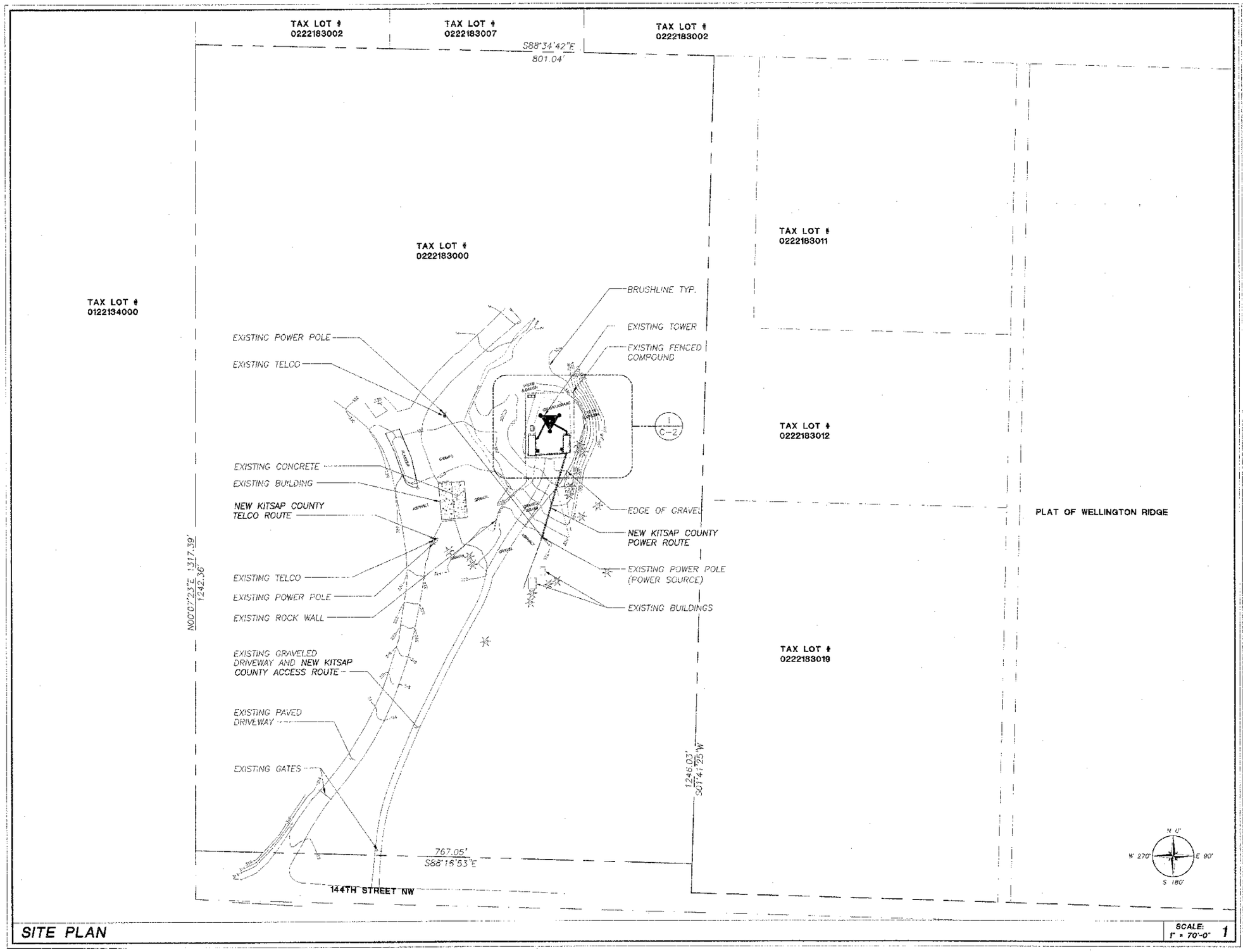

SITE PLAN

SCALE: 1" = 70'-0" 1

ADCOMM Engineering

Specialists in Public Safety Communications

3929 184th Place SE
Bothell, WA
98012-8827

PLANS PREPARED BY

Communication Services, Inc.

3702 WEST VALLEY HIGHWAY N., SUITE 300
AUBURN, WA 98001
VOICE: 253.735.4525 FAX: 253.735.4554

PROJECT INFORMATION

CENCOM - PURDY SITE

14515 54TH AVE. NW
PURDY, WA 98332
PIERCE COUNTY

NO.	DATE	DESCRIPTION	BY
1	05/05/09	PRELIMINARY CDs	JRS
2	06/05/09	FINAL CDs	JN
2	07/14/09	REVISIONS	DM
3	07/15/09	REVISIONS	MA

SEAL

SHEET TITLE

SITE PLAN

SHEET NUMBER

C-1

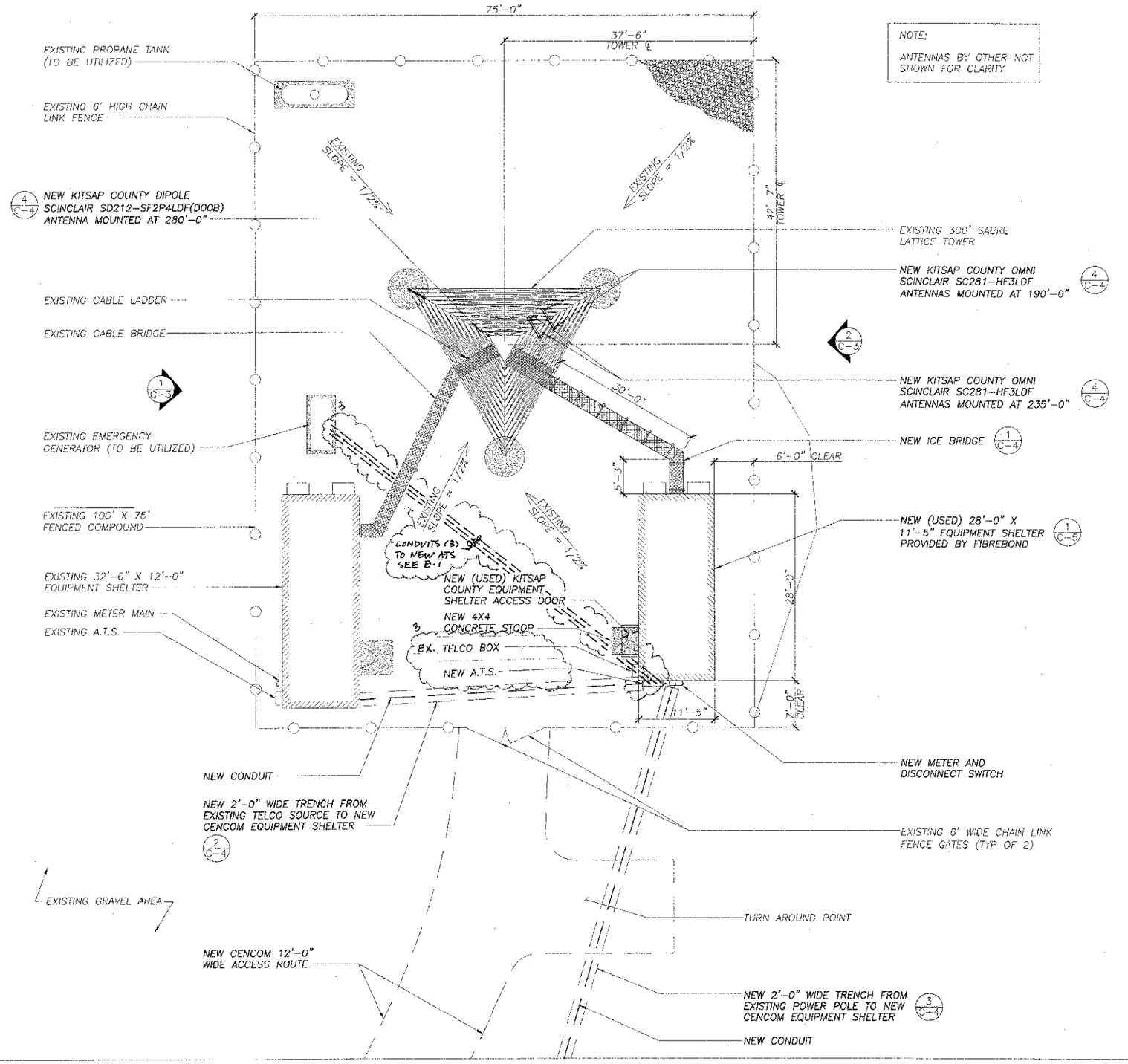

ENLARGED SITE PLAN

SCALE: 1/8" = 1'-0"

1

ADCOMM Engineering

Specialists in Public Safety Communications

3929 184th Place SE
Bothell, WA
98012-8827

PLANS PREPARED BY

Communication Services, Inc.
3702 WEST VALLEY HIGHWAY N., SUITE 300
AUBURN, WA 98001
VOICE: 253.735.4826 FAX: 253.735.4554

PROJECT INFORMATION

CENCOM - PURDY SITE

14515 54TH AVE. NW
PURDY, WA 98332
PIERCE COUNTY

NO.	DATE	DESCRIPTION	BY
1	05/05/09	PRELIMINARY CDs	JRS
2	06/05/09	FINAL CDs	JN
2	07/14/09	REVISIONS	DM
3	07/15/09	REVISIONS	MA

SEAL

SHEET TITLE

ENLARGED SITE PLAN

SHEET NUMBER

C-2

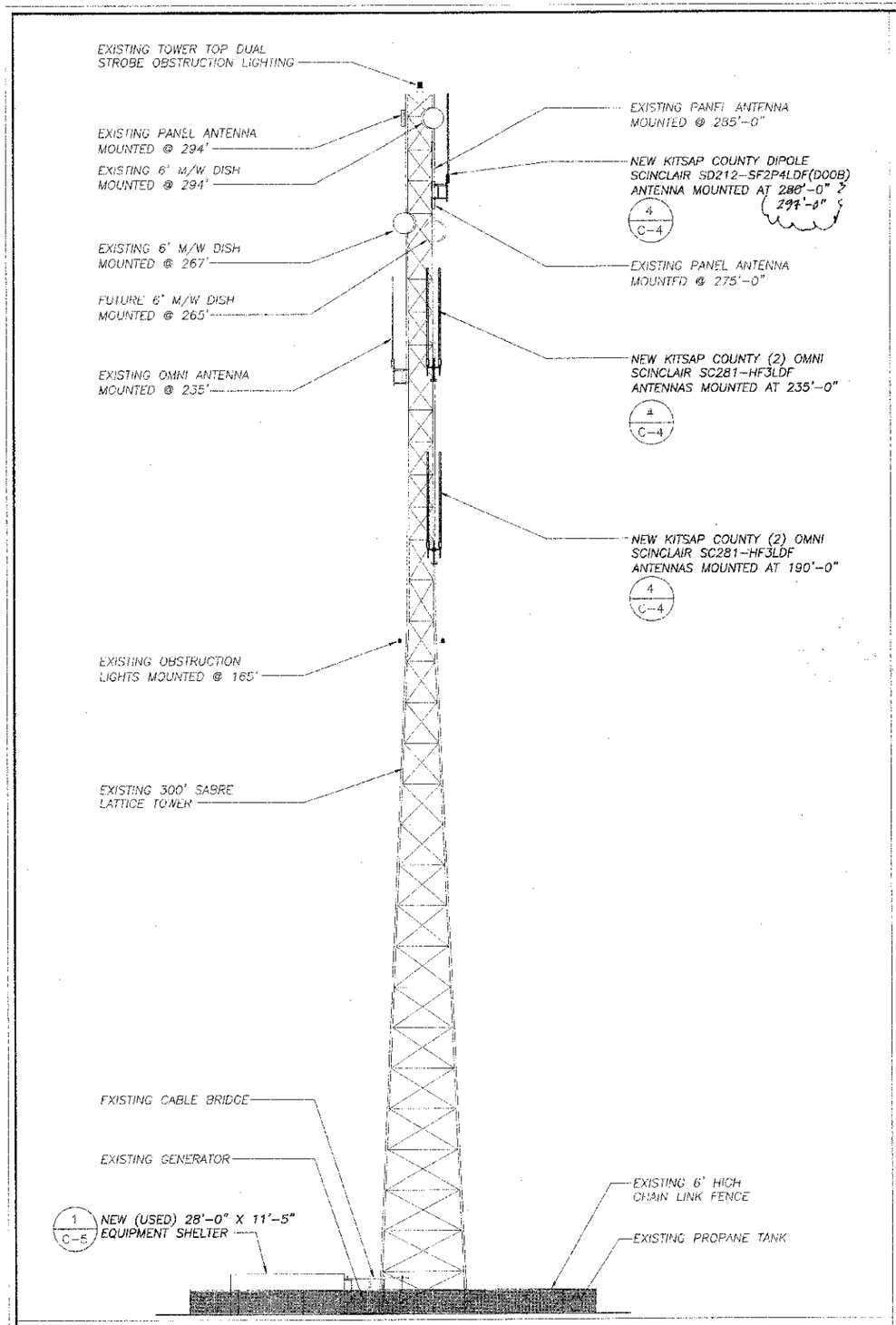

EAST ELEVATION

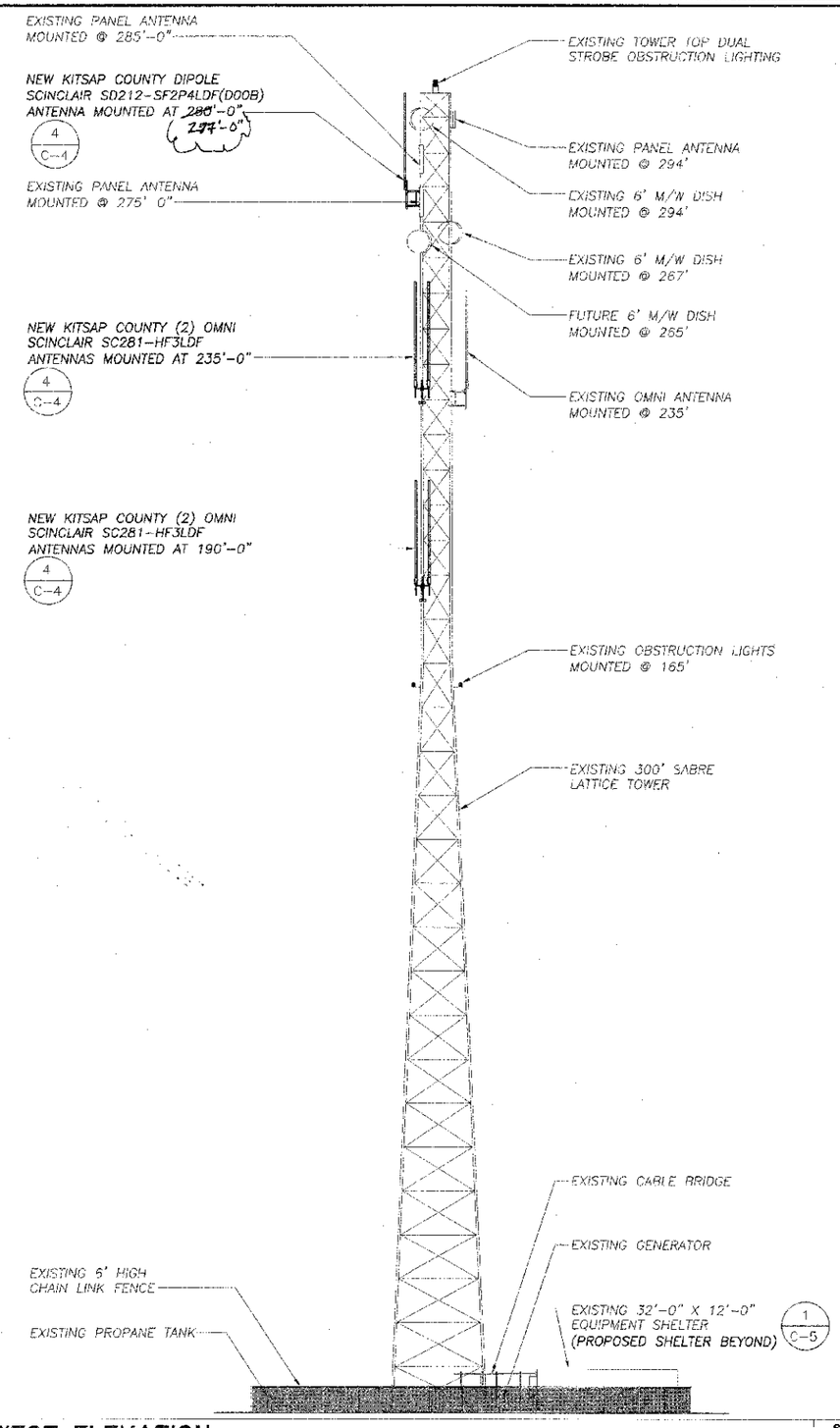

WEST ELEVATION

SCALE: 1/16" = 1'-0" | 1

ADCOMM Engineering

Specialists in Public Safety Communications

3929 184th Place SE
Bothell, WA
98012-8827

PLANS PREPARED BY

Communication Services, Inc.
3707 WEST VALLEY HIGHWAY N., SUITE 300
AUBURN, WA 98001
VOICE: 253.735.4526 FAX: 253.735.4534

PROJECT INFORMATION

CENCOM - PURDY SITE

14515 54TH AVE. NW
PURDY, WA 98332
PIERCE COUNTY

NO.	DATE	DESCRIPTION	BY
1	05/05/09	PRELIMINARY CDs	JRS
2	06/05/09	FINAL CDs	JN
2	07/14/09	REVISIONS	DM
3	07/15/09	REVISIONS	MA

SEAL

SHEET TITLE

WEST ELEVATION

SHEET NUMBER

C-3

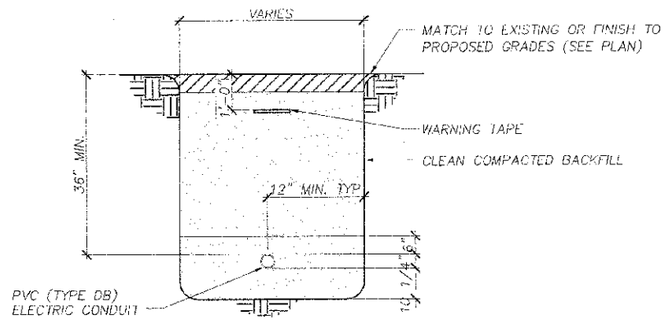

NOTE:
TRENCH BACKFILL SHALL BE COMPACTED TO 90% PRIOR TO DRESS ROCK INSTALLATION

POWER CONDUIT UTILITY TRENCH

SCALE: N.T.S. | 3

NOTES:

1. UNIVERSAL MOUNT FITS TO THE FOLLOWING LEG SIZES (BELOW)
   PIPE: 1¾" O.D. TO 8⅝" O.D.
   ANGLE: 2½"x2½" TO 6"x6"
2. REFER TO TABLE BELOW FOR THE APPROPRIATE PRODUCT #'S (P/N):

STANDOFF	VALMONT P/N
4'-0"	# B3115
6'-0"	# B3116
8'-0"	# B3117

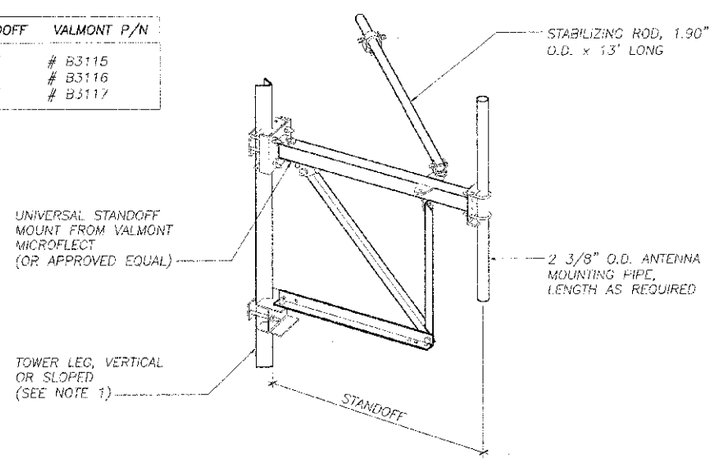

UNIVERSAL STANDOFF MOUNT

SCALE: N.T.S. | 4

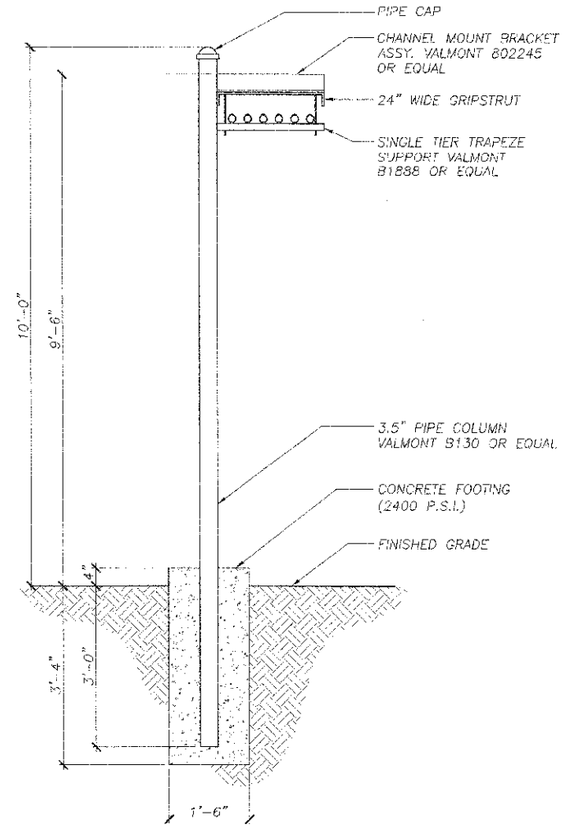

ICE BRIDGE DETAIL

SCALE: N.T.S. | 1

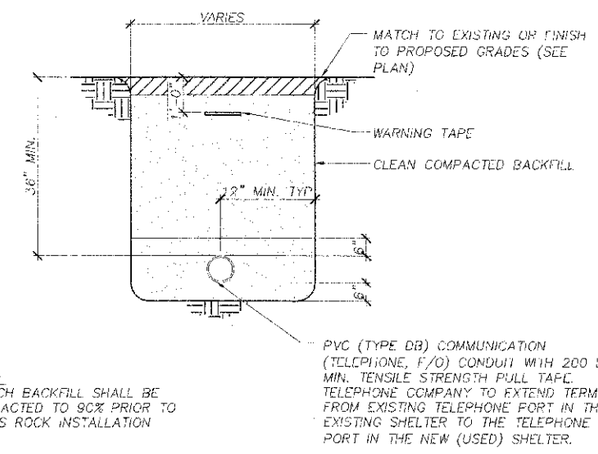

NOTE:
TRENCH BACKFILL SHALL BE COMPACTED TO 90% PRIOR TO DRESS ROCK INSTALLATION

TELCO CONDUIT TRENCH DETAIL

SCALE: N.T.S. | 2

ADCOMM Engineering

Specialists in Public Safety Communications

3929 184th Place SE
Bothell, WA
98012-8827

PLANS PREPARED BY

Communication Services, Inc.
3702 WEST VALLEY HIGHWAY N., SUITE 300
AUBURN, WA 98001
VOICE: 253.735.4528 FAX: 253.735.4554

PROJECT INFORMATION

CENCOM - PURDY SITE

14515 54TH AVE. NW
PURDY, WA 98332
PIERCE COUNTY

NO.	DATE	DESCRIPTION	BY
1	05/05/09	PRELIMINARY CDs	JRS
2	06/05/09	FINAL CDs	JN
2	07/14/09	REVISIONS	DM
2	07/15/09	REVISIONS	MA

SEAL

SHEET TITLE

DETAILS

SHEET NUMBER

C-4

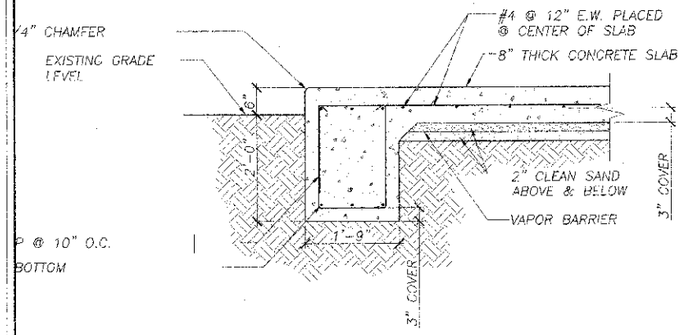

SECTION A-A

FOUNDATION DETAIL

SCALE: 3/4" = 1'-0" | 2

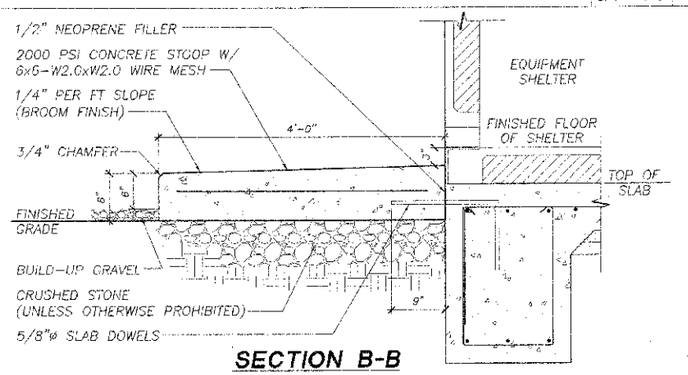

SECTION B-B

CONCRETE STOOP DETAIL

SCALE: 1" = 1'-0" | 3

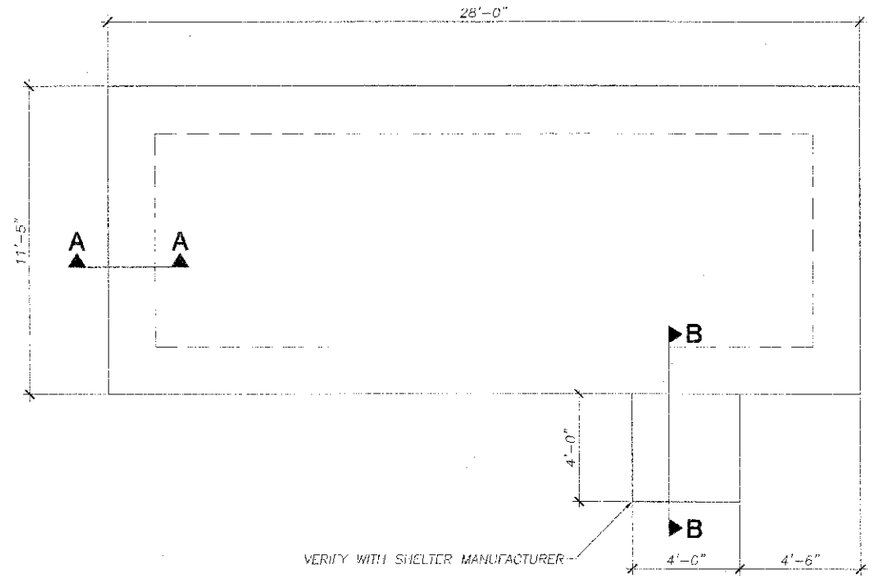

SHELTER FOUNDATION PLAN

SCALE: 3/8" = 1'-0" | 1

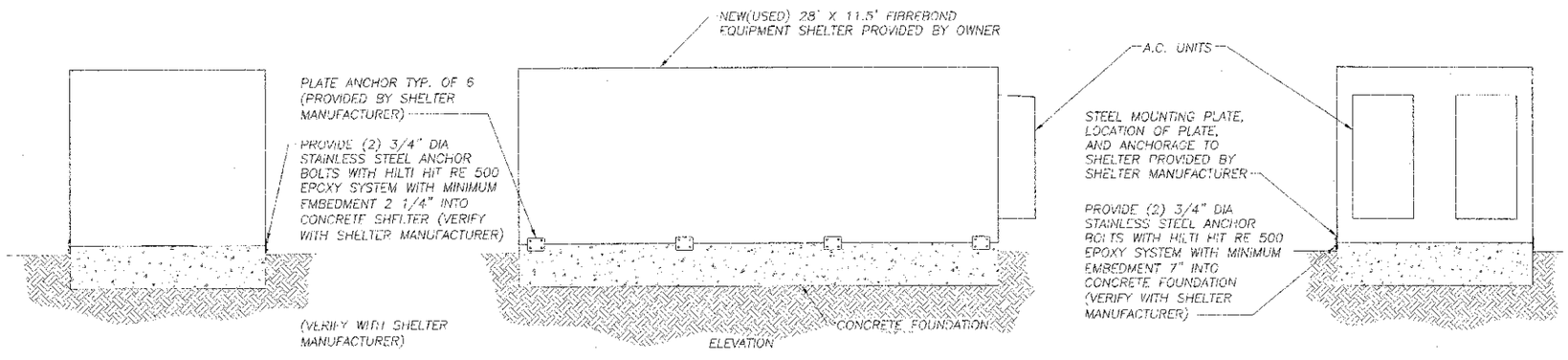

SHED TO FOUNDATION ANCHOR DETAIL

SCALE: 1/4" = 1'-0" | 4

ADCOMM Engineering

Specialists in Public Safety Communications

3929 184th Place SE
Bothell, WA
98012-3827

PLANS PREPARED BY

Communication Services, Inc.
3702 WEST VALLEY HIGHWAY N., SUITE 300
AUBURN, WA 98001
VOICE: 253.735.4525 FAX: 253.735.4554

PROJECT INFORMATION

CENCOM - PURDY SITE

14515 54TH AVE. NW
PURDY, WA 98332
PIERCE COUNTY

NO.	DATE	DESCRIPTION	BY
1	05/05/09	PRELIMINARY CDs	JRS
2	06/05/09	FINAL CDs	JN
2	07/14/09	REVISIONS	DM
3	07/15/09	REVISIONS	MA

SEAL

SHEET TITLE

DETAILS

SHEET NUMBER

C-5

BUILDING CODE:

2006 EDITION OF THE INTERNATIONAL BUILDING CODE. WITH PIERCE COUNTY AMENDMENTS.

LOADS:

WIND LOAD = 85 MPH BASIC WIND SPEED WITH 3 SECOND GUST, EXPOSURE C.
SEISMIC DESIGN CATEGORY = F, R = 3
SEISMIC USE GROUP IV
SOIL SITE CLASS C

FOUNDATIONS:

SOIL REPORT BY ADAPT ENGINEERING WITH AMENDMENTS; PROJECT# WA07-14743-GEO. IN ACCORDANCE WITH THE ABOVE REPORT THE BOTTOM OF FOOTING TO BE 18" MINIMUM BELOW FINISHED GRADE. FINISHED GRADE IS DEFINED AS TOP OF SLAB FOR INTERIOR FOOTINGS AND LOWEST ADJACENT GRADE WITHIN 5 FEET FOR PERIMETER FOOTINGS. DESIGN SOIL BEARING VALUE = 1500 PSF. FOUNDATION EXCAVATIONS SHALL BE INSPECTED BY SOILS ENGINEER PRIOR TO PLACEMENT OF CONCRETE.

CONCRETE:

MINIMUM 28 DAY STRENGTH 3,000 PSI EXCEPT NOTED OTHERWISE:
CAISSON 4,000 PSI
MECHANICALLY VIBRATE ALL CONCRETE WHEN PLACED, EXCEPT THAT SLABS ON GRADE NEED BE VIBRATED ONLY AROUND UNDER-FLOOR DUCTS, ETC. MAXIMUM SLUMP 4 1/2" FOR CONCRETE WITHOUT PLASTICIZER. IF PLASTICIZER IS USED, A HIGHER FINAL SLUMP MAY BE ALLOWED UPON STRUCTURAL ENGINEER'S APPROVAL.

NO FLY ASH ADDITIVES SHALL BE USED IN FLATWORK OR ARCHITECTURALLY EXPOSED CONCRETE.

REINFORCING:

ASTM A615 (Fy = 60 KSI) DEFORMED BARS FOR ALL BARS. ALL GRADE 60 REINFORCING TO BE WELDED SHALL BE ASTM A706. WELDED WIRE FABRIC PER ASTM A185. WIRE PER ASTM A82. NO TACK WELDING OF REINFORCING BARS ALLOWED WITHOUT PRIOR REVIEW OF PROCEDURE WITH THE STRUCTURAL ENGINEER. LATEST ACI CODE AND DETAILING MANUAL APPLY. CLEAR CONCRETE COVERAGES AS FOLLOWS:

CAST AGAINST AND PERMANENTLY EXPOSED TO EARTH ---------- 3"
EXPOSED TO EARTH OR WEATHER
#6 OR LARGER ---------- 2"
#5 AND SMALLER ---------- 1 1/2"
ALL OTHER PER LATEST EDITION OF ACI 318.

LAP SPLICES IN CONCRETE:

LAP SPLICES, UNLESS NOTED OTHERWISE, SHALL BE CLASS "B" TENSION LAP SPLICES PER LATEST EDITION OF ACI 318. LAPS IN WELDED WIRE FABRIC SHALL BE MADE SO THAT THE OVERLAP, MEASURED BETWEEN OUTERMOST CROSS WIRES OF EACH FABRIC SHEET, IS NOT LESS THAN THE SPACING OF CROSS WIRES PLUS 2 INCHES. ALL WELDED WIRE FABRIC SHALL BE CHAIRED TO ENSURE PROPER CLEARANCES.

ALL SPLICE LOCATIONS SUBJECT TO APPROVAL BY THE STRUCTURAL ENGINEER. PROVIDE BENT CORNER BARS TO MATCH AND LAP WITH HORIZONTAL BARS AT ALL CORNERS AND INTERSECTIONS PER TYPICAL DETAILS. REINFORCING BAR SPACING GIVEN ARE MAXIMUM ON CENTERS. ALL BARS PER CRSI SPECIFICATIONS AND HANDBOOK. DOWEL ALL VERTICAL REINFORCING TO FOUNDATION WITH STANDARD 90-DEGREE HOOKS UNLESS NOTED OTHERWISE. SECURELY TIE ALL BARS IN LOCATION BEFORE PLACING CONCRETE. CONCRETE COLUMN DOWEL EMBEDMENT SHALL BE A STANDARD COMPRESSION DOWEL WITH EMBEDMENT LENGTH ACCORDING TO THE LATEST EDITION OF THE ACI 318. (UNLESS NOTED OTHERWISE ON PLANS OR DETAILS).

DRYPACK:

DRYPACK SHALL BE 5,000 PSI NON-SHRINK GROUT, FIVE STAR OR EQUIVALENT. INSTALL DRYPACK UNDER BEARING PLATES BEFORE FRAMING MEMBER IS INSTALLED. AT COLUMNS, INSTALL DRYPACK UNDER BASEPLATES AFTER COLUMN HAS BEEN PLUMBED BUT PRIOR TO FLOOR OR ROOF INSTALLATION.

PRE-ENGINEERED BUILDING DESIGN CRITERIA:

1. PRE-ENGINEERED BUILDING MANUFACTURER SHALL BE RESPONSIBLE FOR THE ENTIRE DESIGN OF THE STRUCTURE, SUPPORT, BRACING, LATERAL ANALYSIS AND ALL RELATED WORK.

2. THE ENTIRE SUPERSTRUCTURE, INCLUDING THE ROOF SHALL BE DESIGNED IN ACCORDANCE WITH THE BUILDING CODE. WIND UPLIFT PRESSURES FOR ENCLOSED AND UNENCLOSED BUILDING AREAS SHALL BE CONSIDERED IN ACCORDANCE WITH THE SAID CODE.

3. THE PRE-ENGINEERED BUILDING SHALL BE DESIGNED TO SUPPORT SELF WEIGHT PLUS SUPERIMPOSED DEAD, LIVE, WIND OR SEISMIC LOADING, WHICHEVER COMBINATION PRODUCES THE MOST SEVERE CONDITION, IN ACCORDANCE WITH THE LATEST RECOMMENDATIONS OF THE METAL BUILDING MANUFACTURERS ASSOCIATION. CONTRACTOR SHALL SUBMIT DESIGN CALCULATIONS AND SHOP DRAWINGS FOR REVIEW PRIOR TO MANUFACTURE. CALCULATIONS AND SHOP DRAWINGS SHALL BE SEALED BY A REGISTERED ENGINEER. SHOP DRAWINGS SHALL SHOW ALL INFORMATION INCLUDING, BUT NOT LIMITED TO, DIMENSIONS, MEMBER SIZES AND PROPERTIES, FRAMING PLANS, SECTIONS AND ALL PERTINENT DETAILS.

4. PRE-ENGINEERED BUILDING MANUFACTURER SHALL DESIGN AND SUPPLY ALL REQUIRED SUB-FRAMING FOR OPENINGS, INCLUDING FRAMING TO SUPPORT THE WEIGHT OF MECHANICAL EQUIPMENT.

PERFORMANCE SPECIFICATION FOR ALTERNATIVE STAIRS DESIGN:

SHOP DRAWINGS:

SHOP DRAWINGS SHALL BE SUBMITTED FOR ALL STRUCTURAL ITEMS IN ADDITION TO ITEMS REQUIRED BY ARCHITECTURAL SPECIFICATIONS.

THE CONTRACTOR SHALL REVIEW ALL SHOP DRAWINGS PRIOR TO SUBMITTAL. ITEMS NOT IN ACCORDANCE WITH CONTRACT DOCUMENTS SHALL BE FLAGGED UPON HIS REVIEW.

VERIFY ALL DIMENSIONS WITH ARCHITECT AND ALL FINISHED GRADE WITH CIVIL DRAWINGS.

ANY CHANGES, SUBSTITUTIONS, OR DEVIATIONS FROM CONTRACT DOCUMENTS SHALL BE CLOUDED BY MANUFACTURER OR FABRICATOR. ANY OF THE AFOREMENTIONED WHICH ARE NOT CLOUDED OR FLAGGED BY SUBMITTING PARTIES, SHALL NOT BE CONSIDERED APPROVED AFTER ENGINEER'S REVIEW, UNLESS NOTED ACCORDINGLY.

THE ENGINEER/OWNER HAS THE RIGHT TO APPROVE OR DISAPPROVE ANY CHANGES TO CONTRACT DOCUMENTS AT ANYTIME BEFORE OR AFTER SHOP DRAWING REVIEW.

THE SHOP DRAWINGS DO NOT REPLACE THE CONTRACT DOCUMENTS. ITEMS OMITTED OR SHOWN INCORRECTLY AND ARE NOT FLAGGED BY THE STRUCTURAL ENGINEER OR ARCHITECT ARE NOT TO BE CONSIDERED CHANGES TO CONTRACT DOCUMENTS. IT IS THE CONTRACTOR'S RESPONSIBILITY TO MAKE SURE ITEMS ARE CONSTRUCTED TO CONTRACT DOCUMENTS.

THE ADEQUACY OF ENGINEERING DESIGNS AND LAYOUT PERFORMED BY OTHERS RESTS WITH THE DESIGNING OR SUBMITTING AUTHORITY.

REVIEWING IS INTENDED ONLY AS AN AID TO THE CONTRACTOR IN OBTAINING CORRECT SHOP DRAWINGS. RESPONSIBILITY FOR CORRECTNESS SHALL REST WITH THE CONTRACTOR.

GENERAL:

ENTIRE CONTRACT DOCUMENTS SHALL BE USED TO BUILD BUILDING. SOME CRITICAL ITEMS REQUIRED BY OTHER DISCIPLINES MAY NOT BE SHOWN ON STRUCTURAL DRAWING (i.e. WALL, FLOOR AND ROOF OPENING, ARCHITECTURAL, MECHANICAL AND PLUMBING LOADS, SUPPORT PLATES ETC.)

ITEMS SHOWN BY OTHER DISCIPLINES WITH REFERENCE TO STRUCTURAL DRAWING BUT NOT SHOWN ON THESE STRUCTURAL DOCUMENT SHALL BE CONSIDERED DESIGN BUILD ITEMS. CONTRACTOR SHALL SUBMIT DESIGN BY OTHERS FOR REVIEW.

THE STRUCTURAL CONSTRUCTION DOCUMENTS REPRESENT THE FINISHED STRUCTURE. THEY DO NOT INDICATE THE METHOD OF CONSTRUCTION. THE CONTRACTOR SHALL PROVIDE ALL MEASURES NECESSARY TO PROTECT THE STRUCTURE DURING CONSTRUCTION. SUCH MEASURES SHALL INCLUDE, BUT NOT BE LIMITED TO, BRACING, SHORING FOR LOADS DUE TO CONSTRUCTION EQUIPMENT, ETC. THE STRUCTURAL ENGINEER SHALL NOT BE RESPONSIBLE FOR THE CONTRACTOR'S MEANS, METHODS, TECHNIQUES, SEQUENCES FOR PROCEDURE OF CONSTRUCTION, OR THE SAFETY PRECAUTIONS AND THE PROGRAMS INCIDENT THERETO (NOR SHALL OBSERVATION VISITS TO THE SITE INCLUDE INSPECTION OF THESE ITEMS).

CONSTRUCTION MATERIALS SHALL BE SPREAD OUT IF PLACED ON FRAMED CONSTRUCTION. LOAD SHALL NOT EXCEED THE DESIGN LIVE LOAD PER SQUARE FOOT.

WHERE REFERENCE IS MADE TO VARIOUS TEST STANDARDS FOR MATERIALS, SUCH STANDARDS SHALL BE THE LATEST EDITION AND/OR ADDENDA.

ESTABLISH AND VERIFY ALL OPENINGS AND INSERTS FOR ARCHITECTURAL, MECHANICAL, PLUMBING AND ELECTRICAL WITH APPROPRIATE TRADES, DRAWINGS AND SUBCONTRACTORS PRIOR TO CONSTRUCTION.

OPTIONS ARE FOR CONTRACTOR'S CONVENIENCE. IF HE CHOOSES AN OPTION, CONTRACTOR SHALL BE RESPONSIBLE FOR ALL NECESSARY CHANGES AND SHALL COORDINATE ALL DETAILS.

NOTES AND DETAILS ON DRAWINGS SHALL TAKE PRECEDENCE OVER GENERAL STRUCTURAL NOTES AND TYPICAL DETAILS. WHERE NO DETAILS ARE SHOWN, CONSTRUCTION SHALL CONFORM TO SIMILAR WORK ON THE PROJECT.

ALL DIMENSIONS SHOWN (INCLUDING ELEVATIONS) ON STRUCTURAL DRAWINGS ARE TO ASSIST CONTRACTOR IN VERIFICATION. SCALING DIMENSIONS FROM DRAWINGS IS NOT PERMITTED. LOCATION OF ALL ITEMS SHALL BE DETERMINED BY DIMENSIONS OR NOTES ONLY; DO NOT USE GRAPHIC APPEARANCE TO ASSUME SPECIFIC LOCATIONS.

CONTRACTOR SHALL BE RESPONSIBLE FOR VERIFICATION OF ALL DIMENSIONS WITH ARCHITECTURAL AND FINISHED GRADE WITH CIVIL DRAWINGS PRIOR TO START OF CONSTRUCTION. RESOLVE ANY DISCREPANCY WITH THE ARCHITECT.

TYPICAL DETAILS MAY NOT NECESSARILY BE CUT ON PLANS, BUT APPLY UNLESS NOTED OTHERWISE.

WHERE DISCREPANCIES OCCUR BETWEEN PLANS, DETAILS, GENERAL STRUCTURAL NOTES AND SPECIFICATIONS, THE GREATER REQUIREMENTS SHALL GOVERN.

ANY ENGINEERING DESIGN, PROVIDED BY OTHERS AND SUBMITTED FOR REVIEW, SHALL BEAR THE SEAL OF AN ENGINEER REGISTERED IN THE STATE OF WASHINGTON.

SUPPLIER OF ENGINEERED STRUCTURAL COMPONENTS (i.e. STEEL JOISTS, STAIRS, PRECAST ITEMS) SHALL BE RESPONSIBLE FOR COMPLETE DESIGN AND SHALL USE ENTIRE CONTRACT DOCUMENTS TO INCLUDE ALL LOADS AND DETAIL REQUIREMENTS FROM ALL DISCIPLINES. SUPPLIER SHALL PROVIDE ADDITIONAL MATERIAL REQUIRED TO MEET ALL THEIR REQUIREMENTS FOR INSTALLATION (i.e. WIDER BEARING PLATES, SHIMS, ERECTION BOLTS ETC.).

STRUCTURAL STEEL SUPPLIER SHALL FURNISH BOLTS FOR OSHA CONNECTIONS (SEE DRAWINGS FOR DETAILS).

WALL SHORING SHALL BE INSTALLED PRIOR TO BACKFILLING BEHIND ALL BUILDING RETAINING WALLS, UNLESS ALL RESTRAINING SLABS ARE INSTALLED. USE HANDTAPPING ONLY WHEN WITHIN 8'-0", OR WITHIN HALF THE WALL HEIGHT OF BACKFILLED WALL.

CONTINUOUS FOUNDATION DRAIN PIPES (FRENCH DRAINS) OR WEEP HOLES SHALL BE PROVIDED BEHIND ALL
BASEMENT WALLS AND ALL EXTERIOR RETAINING WALLS THAT RETAIN MORE THAN 3'-0" OF SOIL WEEP
HOLES WHERE USED SHALL BE 2" IN DIAMETER AT 6'-0" O.C. MAXIMUM.

EXISTING STRUCTURE:

EXISTING STRUCTURAL DIMENSIONS AND MEMBER SIZES ARE FOR REFERENCE ONLY. CONTRACTOR SHALL VERIFY ALL DIMENSIONS IN THE FIELD PRIOR TO FABRICATION. THE CONTRACTOR SHALL VERIFY THE ACTUAL CONFIGURATION OF EXISTING CONSTRUCTION AND THE CONDITION OF THE STRUCTURE BEFORE BEGINNING WORK. ANY DISCREPANCIES OR UNSOUND CONDITIONS SHALL BE REPORTED TO THE ARCHITECT FOR RESOLUTION BEFORE BEGINNING WORK. REFER TO ARCHITECTURAL PLANS FOR DIMENSIONS, EMBEDMENTS, AND OPENINGS NOT SHOWN. REFER TO MECHANICAL AND ELECTRICAL PLANS FOR DUCTS, PIPING, EMBEDMENTS, AND OPENINGS NOT SHOWN.

NOTES

SCALE: N.T.S. | 1

ADCOMM Engineering

Specialists in Public Safety Communications

3929 184th Place SE
Bothell, WA
98012-8827

PLANS PREPARED BY

Communication Services, Inc.
3702 WEST VALLEY HIGHWAY N., SUITE 300
AUBURN, WA 98001
VOICE: 253.735.4525 FAX: 253.735.4554

PROJECT INFORMATION

CENCOM - PURDY SITE

14515 54TH AVE. NW
PURDY, WA 98332
PIERCE COUNTY

NO.	DATE	DESCRIPTION	BY
1	05/05/09	PRELIMINARY CDs	JRS
2	06/05/09	FINAL CDs	JN
2	07/14/09	REVISIONS	DM
3	07/15/09	REVISIONS	MA

SEAL

SHEET TITLE

NOTES

SHEET NUMBER

C-6

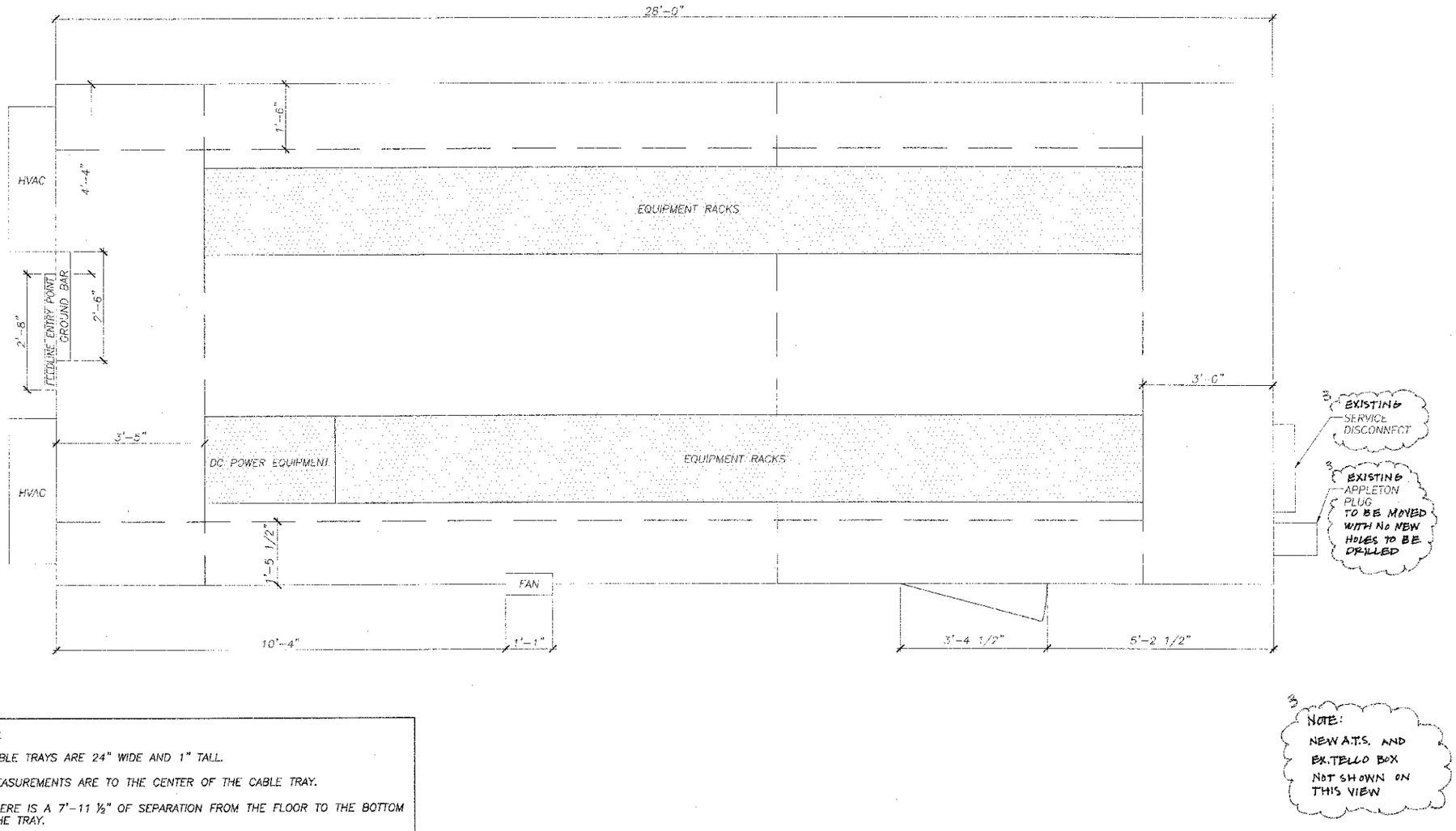

NOTE:

1. CABLE TRAYS ARE 24" WIDE AND 1" TALL.
2. MEASUREMENTS ARE TO THE CENTER OF THE CABLE TRAY.
3. THERE IS A 7'-11 ½" OF SEPARATION FROM THE FLOOR TO THE BOTTOM OF THE TRAY.
4. THERE IS 8 ½" OF SEPARATION FROM THE TOP OF THE CABLE TRAY TO THE CEILING. INTERIOR SHELTER HEIGHT IS 8'-9".

INTERIOR FLOOR LAYOUT

SCALE: 3/4" = 1'-0" | 1

ADCOMM Engineering

Specialists in Public Safety Communications

3929 184th Place SE
Bothell, WA
98012-8827

PLANS PREPARED BY

Communication Services, Inc.
3702 WEST VALLEY HIGHWAY N., SUITE 300
AUBURN, WA 98001
VOICE: 253.735.4626 FAX: 253.735.4554

PROJECT INFORMATION

CENCOM - PURDY SITE

14515 54TH AVE. NW
PURDY, WA 98332
PIERCE COUNTY

NO.	DATE	DESCRIPTION	BY
1	05/05/09	PRELIMINARY CDs	JRS
2	06/05/09	FINAL CDs	JN
2	07/14/09	REVISIONS	DM
3	07/15/09	REVISIONS	MA

SEAL

SHEET TITLE

INTERIOR FLOOR LAYOUT

SHEET NUMBER

C-7

EROSION CONTROL NOTE:

1. NO MATERIAL TO BE STOCKPILED ON SITE.
2. ON-SITE EROSION CONTROL MEASURES SHALL BE THE RESPONSIBILITY OF THE DEVELOPER. ANY PROBLEMS OCCURRING BEFORE FINAL ACCEPTANCE OF THE STORM SYSTEM BY THE MUNICIPALITY SHALL BE CORRECTED BY THE APPLICANT AND/OR THE CONTRACTOR.
3. IN CASE EROSION OR SEDIMENT OCCURS TO ADJACENT PROPERTY, ALL CONSTRUCTION WORK WITHIN THE DEVELOPMENT THAT WILL AGGRAVATE THE SITUATION MUST CEASE AND THE APPLICANT/CONTRACTOR SHALL IMMEDIATELY COMMENCE RESTORATION OR MITIGATION MEASURES. RESTORATION ACTIVITY SHALL CONTINUE UNTIL SUCH TIME AS THE PROBLEM IS RECTIFIED.
4. ALL EROSION AND SEDIMENTATION CONTROL DEVICES SHOWN ON THIS DRAWING SHALL BE INSTALLED PRIOR TO OR AS THE FIRST STAGE OF SITE PREPARATION.
5. SHOULD THE TEMPORARY EROSION AND SEDIMENTATION CONTROL MEASURES AS SHOWN ON THIS DRAWING NOT PROVE ADEQUATE TO CONTROL EROSION AND SEDIMENTATION, THE APPLICANT/CONTRACTOR SHALL INSTALL ADDITIONAL FACILITIES AS NECESSARY TO PROTECT ADJACENT PROPERTIES, SENSITIVE AREAS, NATURAL WATER COURSES, AND/OR STORM DRAINAGE SYSTEMS.
6. IN ANY AREA WHICH HAS BEEN STRIPPED OF VEGETATION OR EXPERIENCED LAND DISTURBING ACTIVITIES AND WHERE NO FURTHER WORK IS ANTICIPATED FOR A PERIOD OF 5 DAYS, ALL DISTURBED AREAS MUST BE IMMEDIATELY STABILIZED WITH MULCHING, GRASS PLANTING, OR OTHER APPROVED EROSION CONTROL TREATMENT APPLICABLE TO THE TIME OF YEAR IN QUESTION. GRASS SEEDING ALONE WILL BE ACCEPTABLE ONLY DURING THE MONTHS OF APRIL THROUGH SEPTEMBER, INCLUSIVE. SEEDING MAY PROCEED, HOWEVER, WHENEVER IT IS IN THE INTEREST OF THE APPLICANT/CONTRACTOR, BUT MUST BE AUGMENTED WITH MULCHING, NETTING, OR OTHER TREATMENT.
7. ALL WORK ASSOCIATED WITH STABILIZING THE DISTURBED AREAS SHALL BE IN ACCORDANCE WITH THE PIERCE COUNTY STORMWATER MANAGEMENT MANUAL.
8. ALL NECESSARY FACILITIES SHALL BE MAINTAINED ON SITE TO PREVENT DEBRIS, DUST AND MUD FROM ACCUMULATING ON THE PUBLIC RIGHT-OF-WAY.

EROSION CONTROL SEEDING MAY BE USED WHERE PERMANENT STRUCTURES ARE TO BE INSTALLED OR EXTENSIVE GRADING OF THE AREA WILL OCCUR BEFORE THE ESTABLISHMENT OF PERMANENT VEGETATION. SEEDING WILL REDUCE EROSION AND SEDIMENTATION BY STABILIZING EXPOSED SOILS THAT WILL NOT BE BROUGHT TO FINAL GRADING OR PERMANENT COVER TREATMENT OR VEGETATION WITHIN 15 DAYS OF THE EXPOSURE. SEED MIXTURE SHALL BE AS SHOWN IN TABLE 8.4 FOR OTHER SEED MIXTURES, USE LOCAL SUPPLIER RECOMMENDATIONS AND APPROVAL FROM THE COUNTY.

FOR SITES WHERE GRASS HAS BEEN PLANTED THROUGH HYDROSEEDING, THE PERFORMANCE BOUND WILL NOT BE RELEASED UNTIL THE GRASS HAS BEEN THOROUGHLY ESTABLISHED, UNLESS OTHERWISE APPROVED BY THE COUNTY.

EROSION CONTROL NOTES

SCALE: N.T.S.

REQUIRED VERIFICATION AND SPECIAL INSPECTION FOR SHELTER

VERIFICATION AND INSPECTION	CONTINOUS	PERIODIC	REFERENCED STANDARD	IBC REFERENCE
I. STEEL CONSTRUCTION				1704.3
1. MATERIAL VERIFICATION OF HIGH-STRENGTH BOLTS, NUTS AND WASHERS.				
A. IDENTIFICATION MARKINGS TO CONFORM TO ASTM STANDARDS SPECIFIED IN THE APPROVED CONSTRUCTION DOCUMENTS.	–	X	APPLICABLE ASTM MATERIAL SPECIFICATIONS; AISC 360, SECTION A3.3	–
B. MANUFACTURER'S CERTIFICATE OF COMPLIANCE REQUIRED.	–	X	–	–
2. INSPECTION OF HIGH-STRENGTH BOLTING:				
BEARING-TYPE CONNECTION	–	X	AISC 360, SECTION M2.5	1704.3.3
II. CONCRETE CONSTRUCTION				1704.4
1. INSPECTION OF REINFORCING STEEL.	–	X	ACI 318: 3.5, 7.1-7.7	1913.4
2. INSPECT BOLTS TO BE INSTALLED IN CONCRETE PRIOR TO AND DURING PLACEMENT OF CONCRETE WHERE ALLOWABLE LOADS HAVE BEEN INCREASED.	X	–	–	1911.5
3. VERIFY USE OF REQUIRED DESIGN MIX.	–	X	ACI 318: 4, 5.2-5.4	1904.2, 1913.2, 1913.3
4. AT THE TIME FRESH CONCRETE IS SAMPLED TO FABRICATE SPECIMENS FOR STRENGTH TESTS, PERFORM SLUMP AND AIR CONTENT TESTS, AND DETERMINE THE TEMPERATURE OF THE CONCRETE.	X	–	ASTM C 172 ASTM C31 ACI318:56.5.8	1913.10
5. INSPECTION OF CONCRETE AND SHOTCRETE PLACEMENT FOR PROPER APPLICATION TECHNIQUES.	X	–	ACI 318: 5.9-5.10	1913.6, 1913.7, 1913.8
6. INSPECTION FOR MAINTENANCE OF SPECIFIED CURING TEMPERATURE AND TECHNIQUES.	–	X	ACI 318: 5.11-5.13	1913.9
7. INSPECT FORMWORK FOR SHAPE, LOCATION AND DIMENSIONS OF THE CONCRETE MEMBER BEING FORMED.	–	X	ACI 318: 6.1.1	–
III. SOILS				1704.7
1. VERIFY MATERIALS BELOW FOOTINGS ARE ADEQUATE TO ACHIEVE THE DESIGN BEARING CAPACITY.	–	X		
2. VERIFY EXCAVATIONS ARE EXTENDED TO PROPER DEPTH AND HAVE REACHED PROPER MATERIAL.	–	X		
3. PERFORM CLASSIFICATION AND TESTING OF CONTROLLED FILL MATERIALS.	–	X		
4. VERIFY USE OF PROPER MATERIALS, DENSITIES AND LIFT THICKNESSES DURING PLACEMENT AND COMPACTION OF CONTROLLED FILL.	X	–		
5. PRIOR TO PLACEMENT OF CONTROLLED FILL, OBSERVE SUBGRADE AND VERIFY THAT SITE HAS BEEN PREPARED PROPERLY.	–	X		

DUTIES AND RESPONSIBILITIES OF THE SPECIAL INSPECTOR

A) WHERE APPLICABLE, SEE ALSO SECTION 1707.1, SPECIAL INSPECTION FOR SEISMIC RESISTANCE.

B) THE SPECIAL INSPECTOR SHALL OBSERVE THE WORK ASSIGNED TO BE CERTAIN IT CONFORMS WITH THE APPROVED DESIGN DRAWINGS AND SPECIFICATION.

C) THE SPECIAL INSPECTOR SHALL FURNISH INSPECTION REPORTS TO THE BUILDING OFFICIAL, AND TO THE ENGINEER.

D) UPON COMPLETION OF THE ASSIGNED WORK THE ENGINEER OR ARCHITECT SHALL COMPLETE AND SIGN THE APPROPRIATE FORMS CERTIFYING THAT TO THE BEST OF HIS KNOWLEDGE THE WORK IS IN CONFORMANCE WITH THE APPROVED PLANS AND SPECIFICATIONS AND THE APPLICABLE WORKMANSHIP PROVISIONS OF THE CODE.

3 SHELTER INSPECTION NOTES

SCALE: N.T.S. 2

ADCOMM Engineering

Specialists in Public Safety Communications

3929 184th Place SE
Bothell, WA
98012-8827

PLANS PREPARED BY

Communication Services, Inc.

3702 WEST VALLEY HIGHWAY N., SUITE 300
AUBURN, WA 98001
VOICE: 253.735.4626 FAX: 253.735.4654

PROJECT INFORMATION

CENCOM - PURDY SITE

14515 54TH AVE. NW
PURDY, WA 98332
PIERCE COUNTY

NO.	DATE	DESCRIPTION	BY
1	05/05/09	PRELIMINARY CDs	JRS
2	06/05/09	FINAL CDs	JN
2	07/14/09	REVISIONS	DM
3	07/15/09	REVISIONS	MA

SEAL

SHEET TITLE

EROSION CONTROL & SPECIAL INSPECTION, NOTES

SHEET NUMBER

C-8

NOTE:

A SINGLE–PHASE, THREE–WIRE SERVICE OF 225 AMPERES OR LESS TAKEN FROM ANY 208Y/120 OR 480Y/277–VOLT SYSTEM REQUIRES A FIVE–TERMINAL SOCKET. THE FIFTH TERMINAL SHALL BE AT THE NINE O'CLOCK POSITION. A TAP SHALL BE CONNECTED FROM THE NEUTRAL BUS TO THE FIFTH TERMINAL.

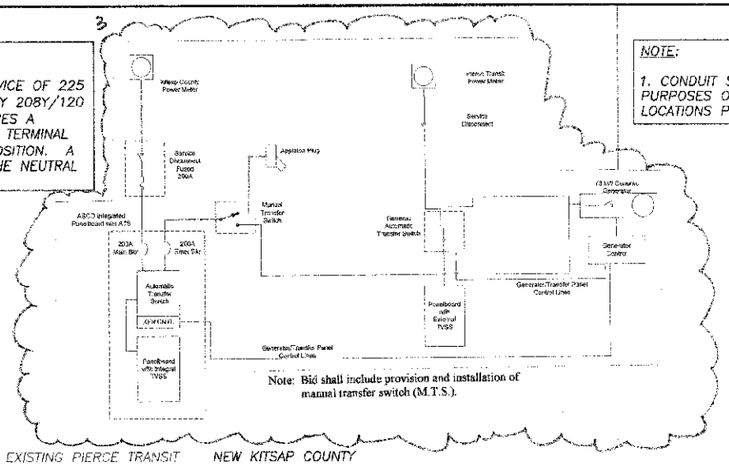

NOTE:

1. CONDUIT SHOWN FOR DIAGRAMMATIC PURPOSES ONLY – VERIFY EXACT STUB–UP LOCATIONS PRIOR TO CONSTRUCTION

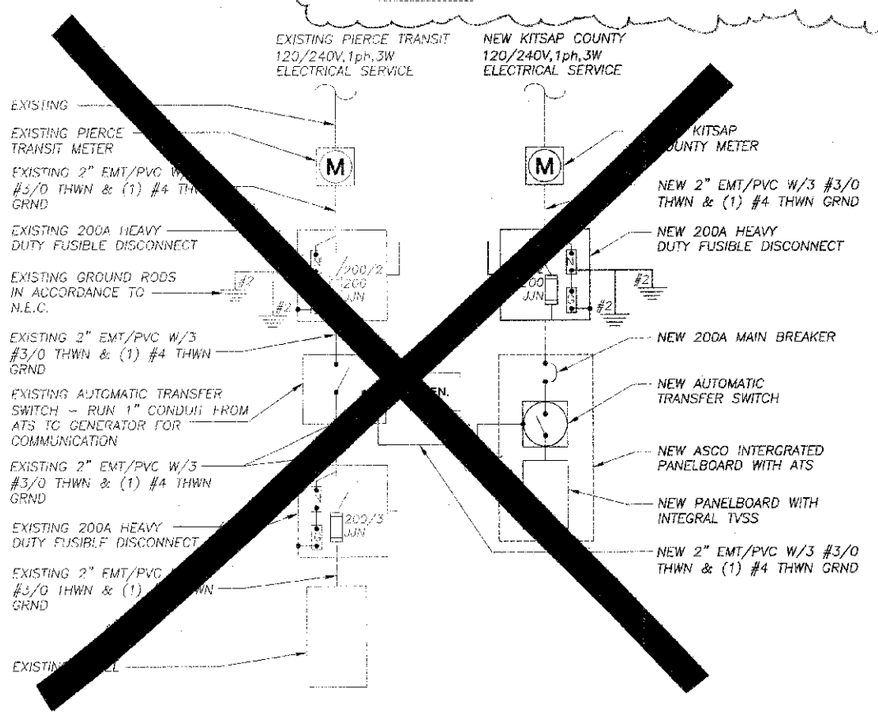

ONE-LINE DIAGRAM

SCALE: 3/8" = 1'-0" 2

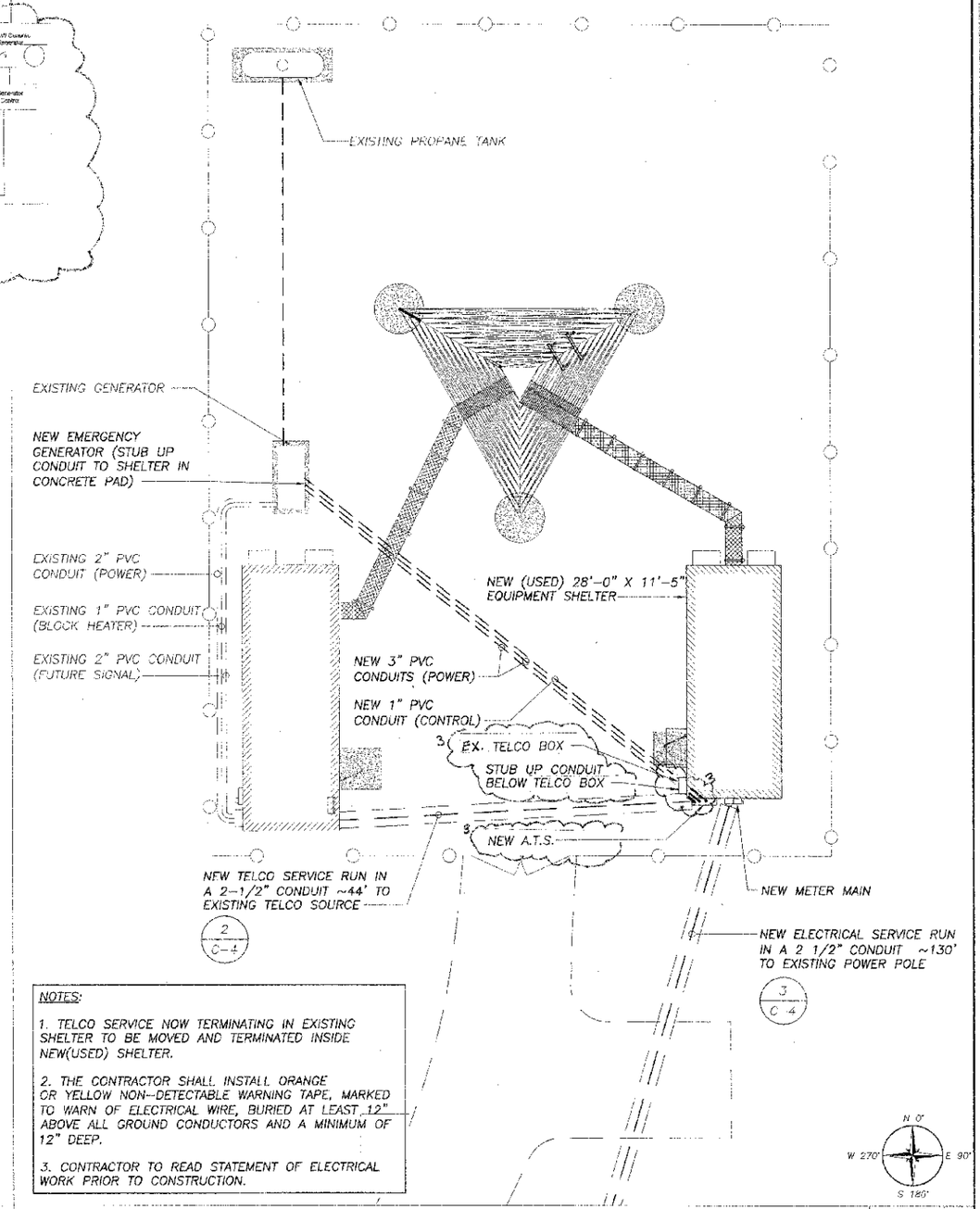

NOTES:

1. TELCO SERVICE NOW TERMINATING IN EXISTING SHELTER TO BE MOVED AND TERMINATED INSIDE NEW(USED) SHELTER.

2. THE CONTRACTOR SHALL INSTALL ORANGE OR YELLOW NON–DETECTABLE WARNING TAPE, MARKED TO WARN OF ELECTRICAL WIRE, BURIED AT LEAST 12" ABOVE ALL GROUND CONDUCTORS AND A MINIMUM OF 12" DEEP.

3. CONTRACTOR TO READ STATEMENT OF ELECTRICAL WORK PRIOR TO CONSTRUCTION.

ELECTRICAL PLAN

SCALE: 1/8" = 1'-0" 1

ADCOMM Engineering

Specialists in Public Safety Communications

3929 184th Place SE
Bothell, WA
98012-8827

PLANS PREPARED BY

Communication Services, Inc.
3702 WEST VALLEY HIGHWAY N., SUITE 320
AUBURN, WA 98001
VOICE: 253.735.4626 FAX: 253.735.4564

PROJECT INFORMATION

CENCOM - PURDY SITE

14515 54TH AVE. NW
PURDY, WA 98332
PIERCE COUNTY

NO.	DATE	DESCRIPTION	BY
1	05/05/09	PRELIMINARY CDs	JRS
2	06/05/09	FINAL CDs	JN
2	07/14/09	REVISIONS	DM
3	07/15/09	REVISIONS	MA

SEAL

SHEET TITLE

ELECTRICAL PLAN & ONE-LINE DIAGRAM

SHEET NUMBER

E-1

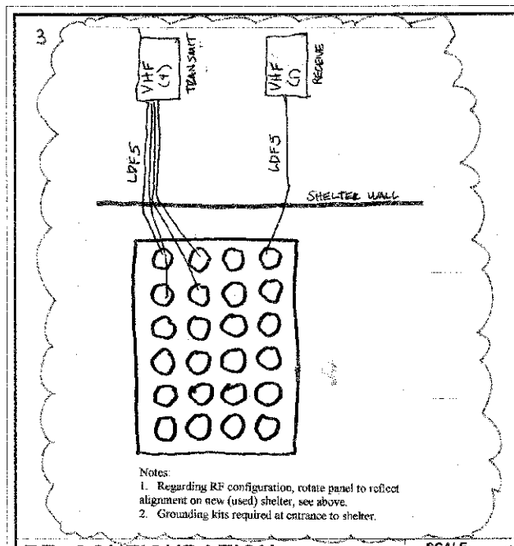

Notes:
1. Regarding RF configuration, rotate panel to reflect alignment on new (used) shelter, see above.
2. Grounding kits required at entrance to shelter.

RF CONFIGURATION

SCALE: N.T.S. | 2

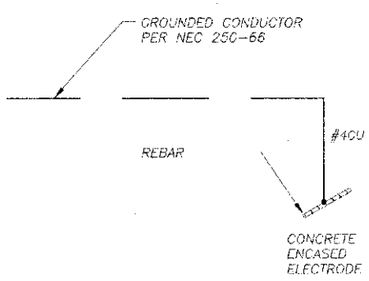

UFER GROUNDING DETAIL

SCALE: N.T.S. | 3

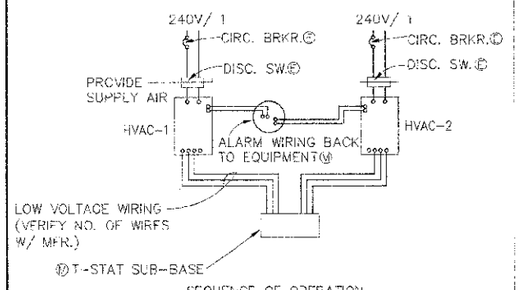

SEQUENCE OF OPERATION

AN ENVIRONMENTAL CONTROL PANEL, HOFFMAN CONTROL ENCLOSURE A16148CHORFG (OR APPROVED EQUIVALENT), BACK PANEL A16P14, SHALL OPERATE HVAC-1 AND HVAC-2. THE CONTROL PANEL WILL ALTERNATE THE OPERATION OF HVAC-1 AND HVAC-2 FOR EQUAL PERIODS OF TIME. BUT, SHOULD THE COOLING LOAD REQUIRE THE OPERATION OF BOTH HVAC-1 AND HVAC-2, THE CONTROL PANEL WILL OPERATE BOTH UNITS SIMULTANEOUSLY.

HVAC DETAIL

SCALE: N.T.S. | 4

NOTE:

1. USE 6" STANDARD GALVANIC ANODE BACKFILL OVER ALL BURIED CONDUCTOR (BACKFILL TO BE 75% GYPSUM 20% BENTONITE & 5% SODIUM SULPHATE)
2. BURY ALL CONDUCTOR 30" OR BELOW FROST LINE (WHICHEVER IS GREATER) AND 36" FROM EXISTING FOUNDATIONS WHEN POSSIBLE.
3. SHELTER INTERNAL/EXTERNAL GROUND BAR SYSTEM TO BE HARGER EPK-24 OR EQUAL (PROVIDED WITH SHELTER). FASTEN GROUND STRAPS TO SHELTER USING HARGER EPKPPCST OR EQUAL AND CADWELD TO GROUND RING.
4. GROUND EACH TOWER LEG TO THE GROUND RING IN 2 PLACES AND TO TOWER FOUNDATION UFER GROUND IN 1 PLACE. KEEP TOWER GROUNDING CONDUCTORS SEPARATED BY AT LEAST 90 DEGREES.
5. ALL GROUNDING TO BE PER CODE AND MOTOROLA R56 REQUIREMENTS.
6. USE UFER GROUNDING SYSTEM ON ALL NEW FOUNDATIONS.
7. CONTRACTOR SHALL CONNECT ALL INTERIOR EQUIPMENT TO BUILDING HALO GROUNDING LOOP.
8. THE CONTRACTOR SHALL NOTIFY THE OWNER OR OWNERS REP PRIOR TO STARTING ANY GROUNDING SYSTEM WORK.
9. GROUNDING SYSTEM FOR THE NEW SHELTER TO CONNECT TO EXISTING PIERCE COUNTY GROUNDING RING.

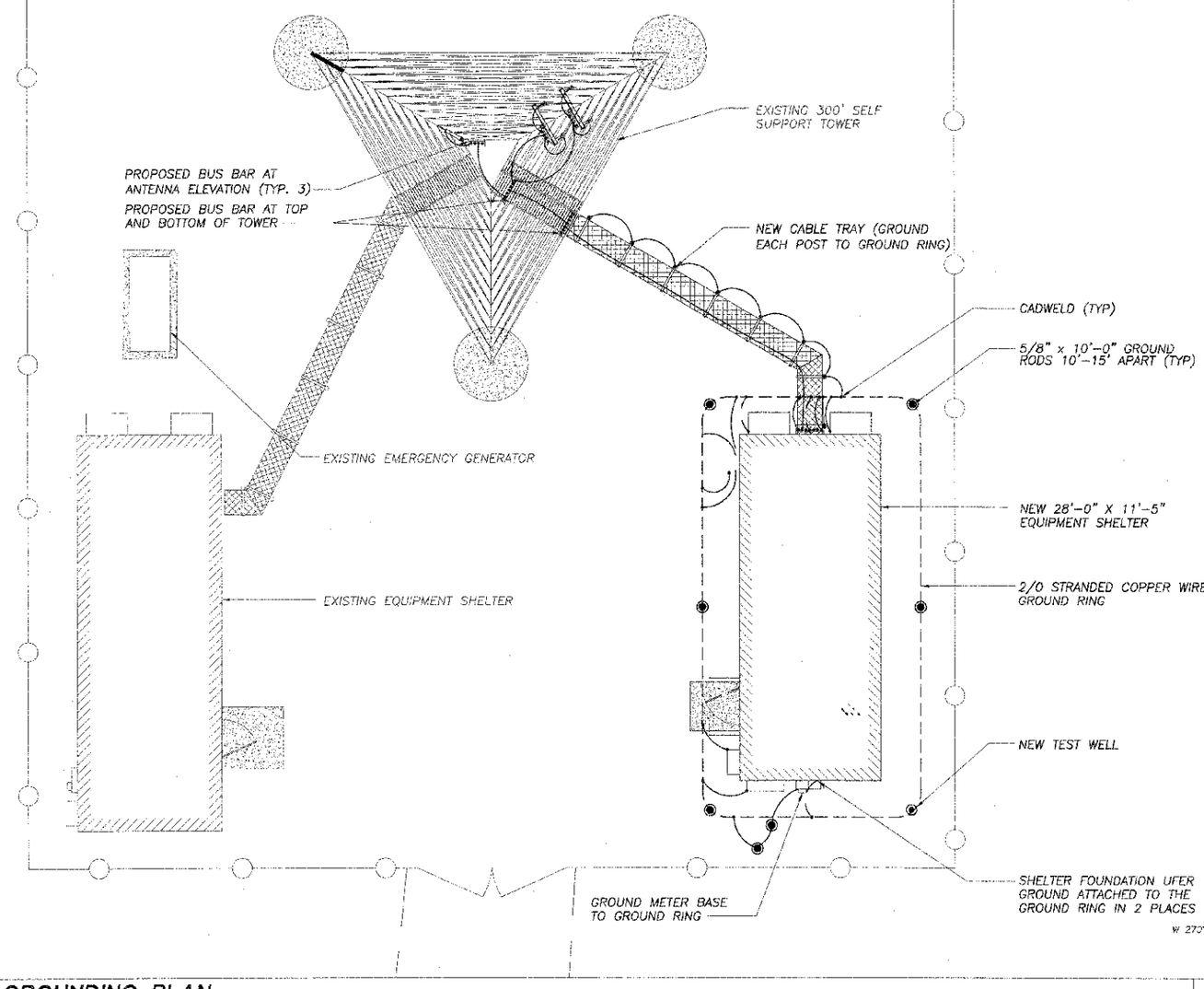

GROUNDING PLAN

SCALE: 3/16" = 1'-0" | 1

ADCOMM Engineering

Specialists in Public Safety Communications

3929 184th Place SE
Bothell, WA
98012-8827

PLANS PREPARED BY

Communication Services, Inc.
3702 WEST VALLEY HIGHWAY N., SUITE 300
AUBURN, WA 98001
VOICE: 253.735.4625 FAX: 253.735.4664

PROJECT INFORMATION

CENCOM - PURDY SITE

14515 54TH AVE. NW
PURDY, WA 98332
PIERCE COUNTY

NO.	DATE	DESCRIPTION	BY
1	05/05/09	PRELIMINARY CDs	JRS
2	06/05/09	FINAL CDs	JN
2	07/14/09	REVISIONS	DM
3	09/16/09	REVISIONS	MAA

SEAL

SHEET TITLE

GROUNDING PLAN

SHEET NUMBER

E-2

NOTES
1. ALL HARDWARE BOLTS, NUTS, LOCK WASHERS SHALL BE STAINLESS STEEL. ALL HARDWARE ARE TO BE AS FOLLOWS: BOLT, LOCK WASHER, GROUND BAR (GRADE 318 OR BETTER), GROUND LUG, LOCK WASHER AND NUT.
2. CONNECTIONS TO STEEL SHALL HAVE A THOMAS BETTIS IDTW DRAGON TOOTH TRANSITION WASHER BETWEEN THE LUG AND THE STEEL. ALL HARDWARE ARE TO BE AS FOLLOWS: BOLT, LOCK WASHER, STEEL DRAGON TOOTH WASHER, GROUND LUG, LOCK WASHER AND NUT.
3. COPPER SHIELD, ANTIOX, OR NO-OX OR EQUIVALENT SHALL BE PLACED WHERE ALL DISSIMILAR METALS CONNECT.
4. ALL LUGS ARE TO BE INSTALLED PER MANUFACTURES SPECIFICATIONS.

WIRE SIZE	BURNDY LUG	BOLT SIZE
#6 AWG	YA6C-2TC38	3/8" - 16 NC S 3 BOLT
#2 AWG SOLID	YA3C-2TC38	3/8" - 16 NC S 3 BOLT
#2 AWG STRANDED	YA2C-2TC38	3/8" - 16 NC S 3 BOLT
#2/0 AWG	YA26-2TC38	3/8" - 16 NC S 3 BOLT
#4/0 AWG	YA28-2N	1/2" - 16 NC S 3 BOLT

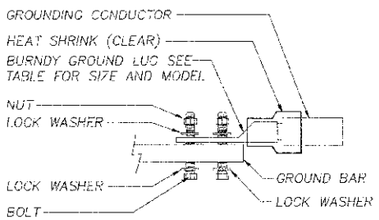

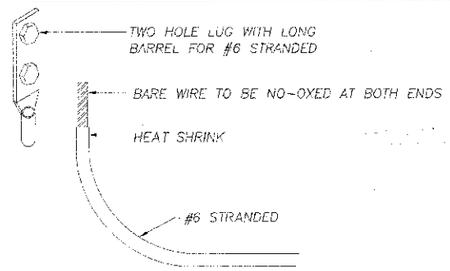

GROUND LUG TO GROUND BAR DETAIL

SCALE: N.T.S. | 2

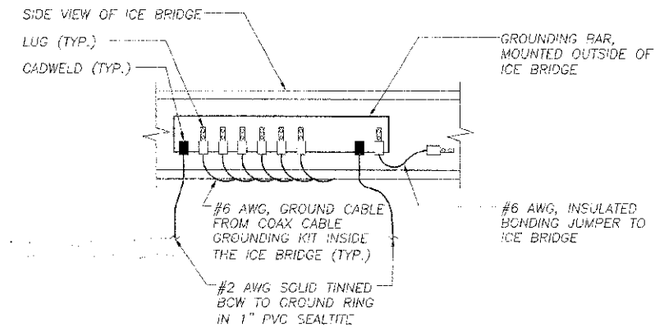

GROUND BAR MOUNTED TO WAVEGUIDE BRIDGE

SCALE: N.T.S. | 1

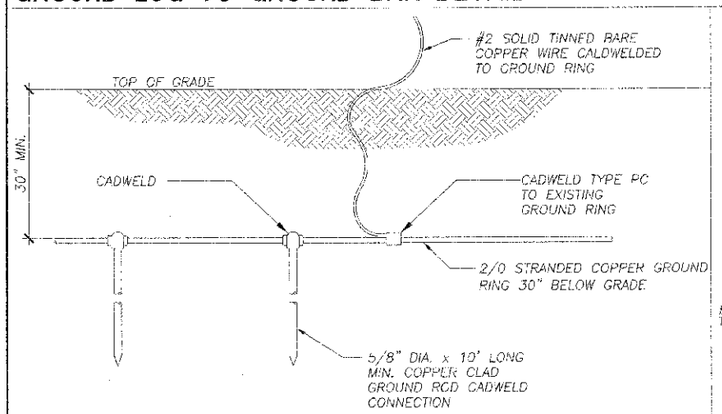

GROUND ROD DETAIL

SCALE: N.T.S. | 5

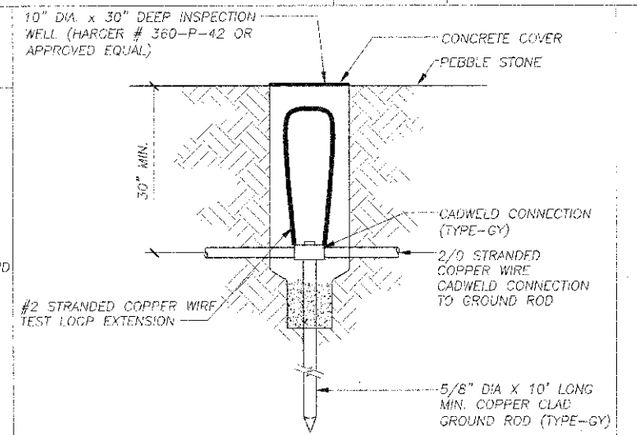

TEST WELL DETAIL

SCALE: N.T.S. | 4

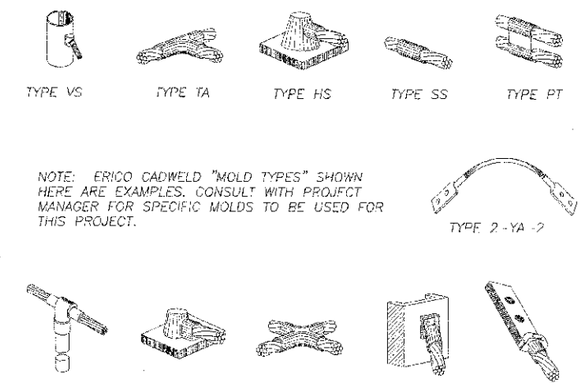

NOTE: ERICO CADWELD "MOLD TYPES" SHOWN HERE ARE EXAMPLES. CONSULT WITH PROJECT MANAGER FOR SPECIFIC MOLDS TO BE USED FOR THIS PROJECT.

EXOTHERMIC WELD DETAILS

SCALE: N.T.S. | 3

GROUNDING NOTES:
1. ALL INSTALLATIONS TO BE FIELD VERIFIED WITH OWNER OR OWNERS REP.
2. ALL GROUND WIRE SHALL BE 2/0 STRANDED COPPER UNLESS OTHERWISE NOTED.
3. ALL GROUND WIRES SHALL PROVIDE A STRAIGHT, DOWNWARD PATH TO GROUND WITH GRADUAL BENDS REQUIRED. GROUND WIRES SHALL NOT BE LOOPED OR SHARPLY BENT.
4. CONTRACTOR SHALL COORDINATE INSTALLATION OF GROUND RODS AND GROUND RING WITH FOUNDATION AND UNDERGROUND CONDUIT.
5. ALL EXPOSED GROUND LEADS TO BE RUN IN 1" PVC SEALTITE-CORE FLEX AND SEALED WITH SILICON SEALANT.
6. KOPR-SHIELD ANTI-OXIDATION COMPOUND SHALL BE USED ON ALL GROUNDING CONNECTIONS.
7. ALL UNDERGROUND CONNECTIONS SHALL BE CADWELD CONNECTIONS W/ PHOTOS AND OR VERIFIED BY OWNER OR OWNERS REP.
8. ALL CADWELD CONNECTIONS SHALL BE INSTALLED UTILIZING THE PROPER CONNECTION/MOLD AND MATERIALS FOR THE PARTICULAR APPLICATION.
9. ALL BOLTED GROUNDING CONNECTIONS SHALL BE INSTALLED WITH A LOCK WASHER UNDER THE NUT. HARDWARE FOR BOLTED CONNECTION SHALL BE A MINIMUM OF 3/8Ø AND ALL SHALL BE STAINLESS STEEL.
10. GROUNDING WIRE SHALL NOT BE INSTALLED OR ROUTED THROUGH HOLES IN ANY METAL OBJECTS OR SUPPORTS TO PRECLUDE ESTABLISHING A "CHOKE" POINT.
11. PLASTIC CLIPS OR METAL CLIPS WHICH DO NOT COMPLETELY SURROUND THE GROUNDING CONDUCTOR SHALL BE USED TO FASTEN AND SUPPORT GROUNDING CONDUCTORS. FERROUS METAL CLIPS WHICH COMPLETELY SURROUND THE GROUNDING CONDUCTOR SHALL NOT BE USED.
12. THE GROUNDING CONNECTION TO THE CUTOFF SWITCH, CIRCUIT BREAKER PANEL, AND TELCO INTERFACE BOX SHALL BE MADE BY CONNECTING A CONDUCTOR FROM THE GROUND RING TO THE FACTORY FURNISHED GROUND BAR IN EACH COMPARTMENT.
13. SITE GROUNDING MUST CONFORM TO ARTICLE 250-106 OF THE 2005 N.E.C. & MOTOROLA R-56

GROUNDING NOTES

SCALE: N.T.S. | 8

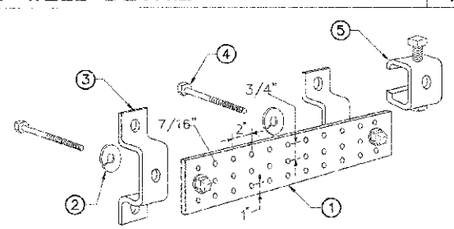

LEGEND:
1- TINNED COPPER GROUND BAR, 1/4" X 4" X 20", NEWTON INSTRUMENT CO. (OR EQUAL) HOLE CENTERS TO MATCH NEMA DOUBLE LUG CONFIGURATION.
2- 5/8" LOCKWASHERS, NEWTON INSTRUMENT CO. (OR EQUAL).
3- WALL MOUNTING BRACKET, NEWTON INSTRUMENT CO. (OR EQUAL).
4- 5/8-11 X 1" H.H.C.S. BOLTS, NEWTON INSTRUMENT CO. (OR EQUAL).
5- UNIVERSAL CLAMP (USE IN PLACE OF WALL MOUNTING BRACKET WHERE NEEDED).

GROUND BAR DETAIL

SCALE: N.T.S. | 7

NOTE:
COORDINATE WITH LOCAL UTILITY COMPANIES TO OBTAIN REQUIREMENTS.

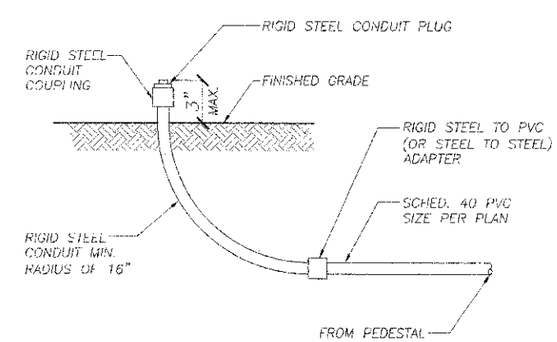

STUB UP DETAIL

SCALE: N.T.S. | 6

ADCOMM Engineering

Specialists in Public Safety Communications

3929 184th Place SE
Bothell, WA
98012-8827

PLANS PREPARED BY

Communication Services, Inc.
3702 WEST VALLEY HIGHWAY N., SUITE 300
AUBURN, WA 98001
VOICE: 253.735.4526 FAX: 253.735.4564

PROJECT INFORMATION

CENCOM - PURDY SITE

14515 54TH AVE. NW
PURDY, WA 98332
PIERCE COUNTY

NO.	DATE	DESCRIPTION	BY
1	05/05/09	PRELIMINARY CDs	JRS
2	06/05/09	FINAL CDs	JN
2	07/14/09	REVISIONS	DM
3	07/15/09	REVISIONS	MA

SEAL

SHEET TITLE

GROUNDING DETAILS

SHEET NUMBER

E-3